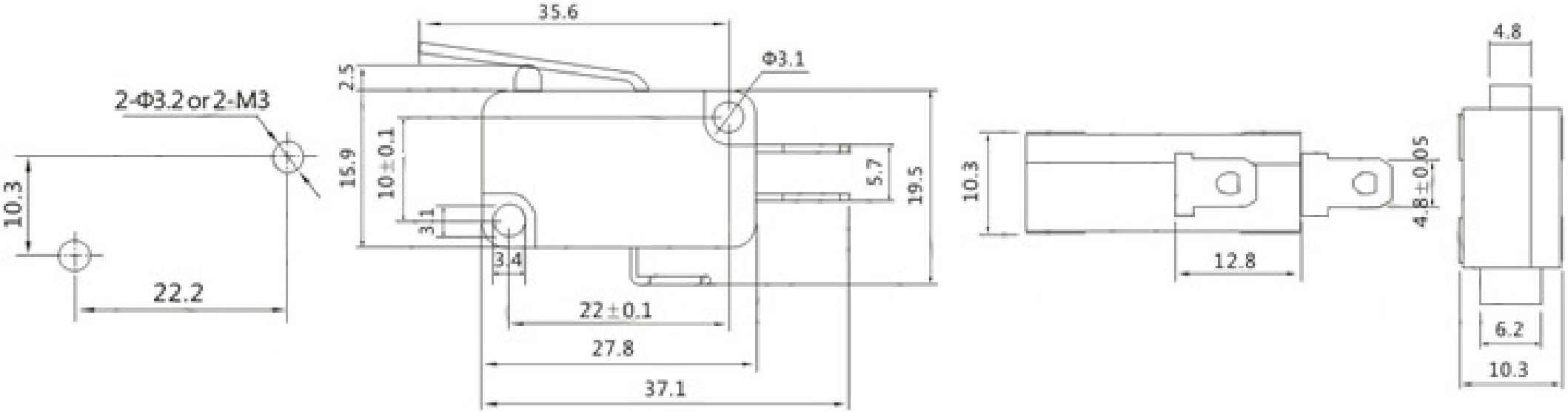
2-Φ3.2 or 2-M3
10.3
22.2
35.6
2.5
15.9
10±0.1
3.1
3.4
Φ3.1
5.7
19.5
22±0.1
27.8
37.1
10.3
12.8
4.8±0.05
4.8
6.2
10.3