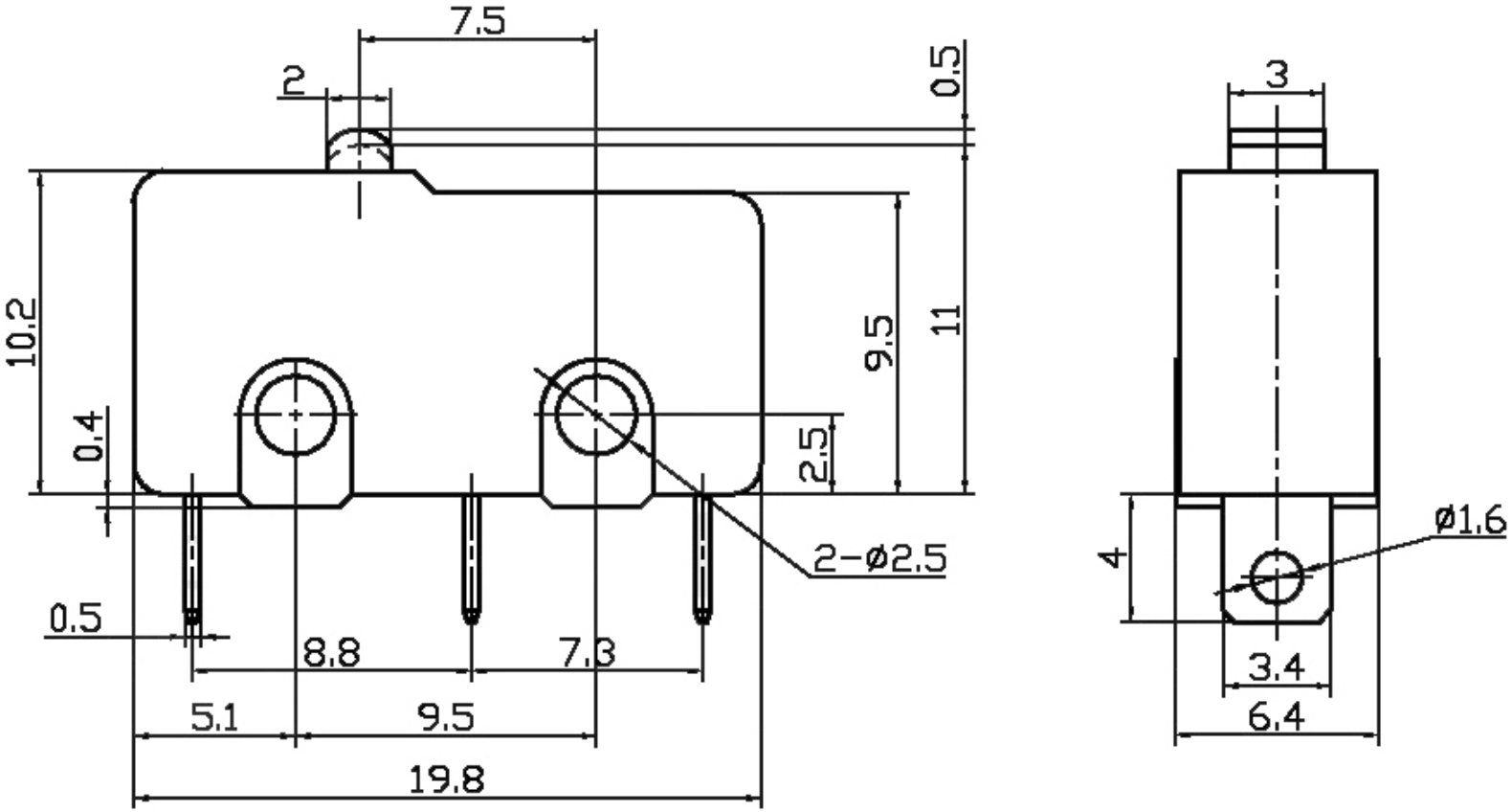
7.5
2
0.5
10.2
9.5
11
0.4
2.5
2-ø2.5
0.5
8.8
7.3
5.1
9.5
19.8
3
ø1.6
4
3.4
6.4