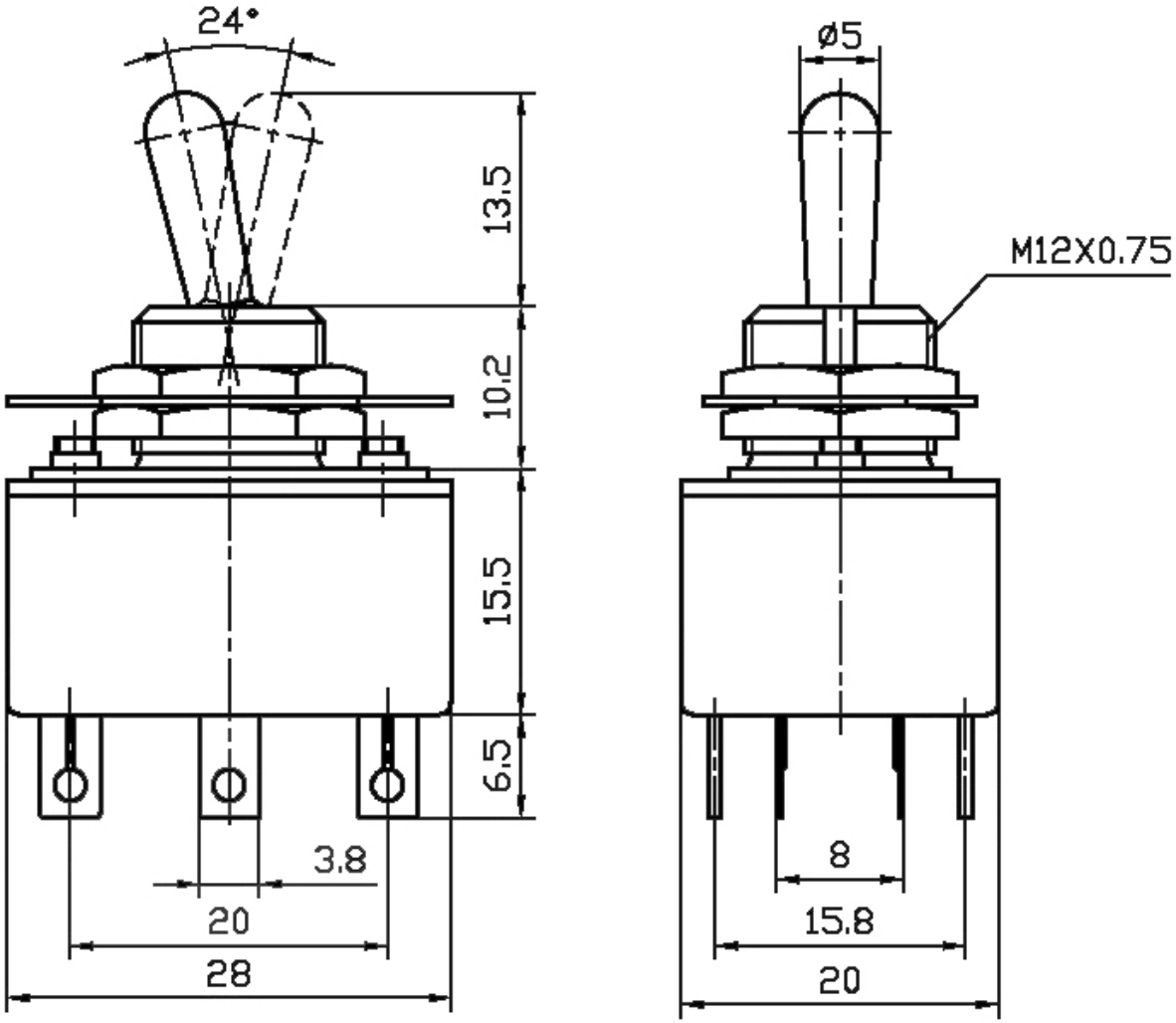
24°
13.5
10.2
15.5
6.5
3.8
20
28
ø5
M12X0.75
8
15.8
20