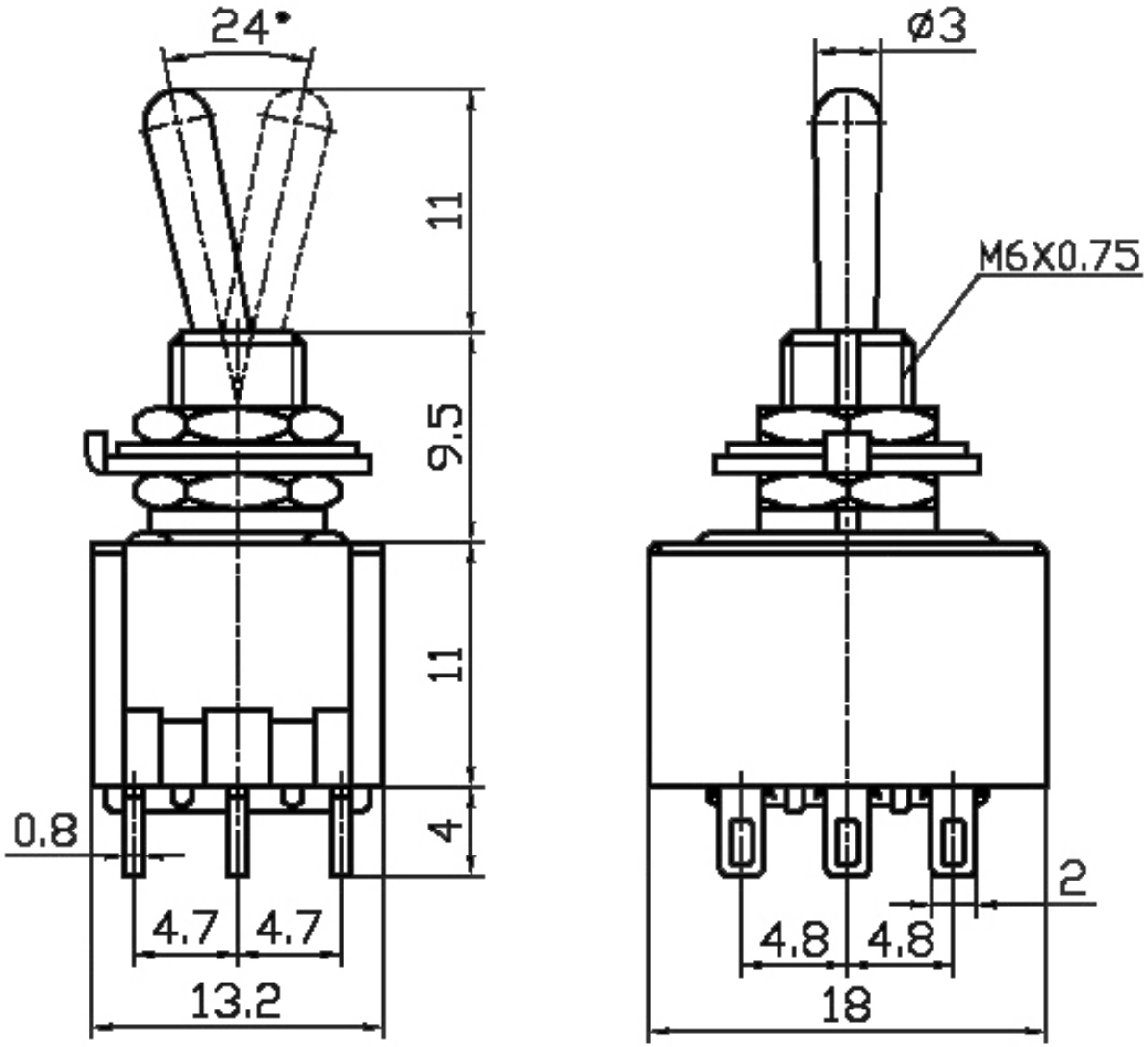
24°
11
9.5
11
4
0.8
4.7
4.7
13.2
Ø3
M6X0.75
2
4.8
4.8
18