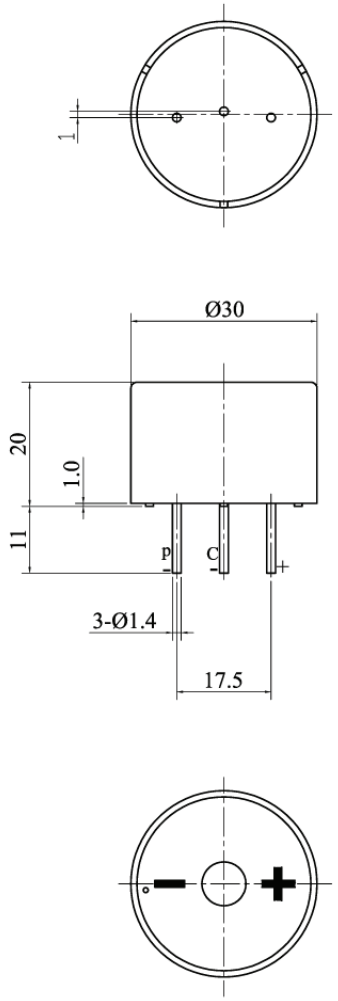

SPECIFICATION

1.Rated Voltage 12VDC
2.Operating Voltage .....3~16VDC
3.Max.Rated Current .....15mA at 12VDC
4.Resonant Frequency .....3.5±0.5KHz
5.Min.Sound Pressure Level.....80dB at 12VDC/30cm
6.Tone Nature .....Continuous+Pulse
7.Shell Material/Color .....PC/Black
8.Operating Temperature .....-20~+80℃
9.Store Temperature .....-30~+100℃
10.Weight 6g
11.Remark:
P(-).....Pulse(-)
C(-).....Continuous(-)
+.....Positive(+)

No.	DESCRIPTION	APPROVED	DATE

TOLERANCES UNLESS NOTED OTHERWISE
.X ±
.XX ±
.XXX ±
90° FORMED +2° ANGLES -1°
FIRST ANGLE PROJECTION

APPROVALS	DATE
DRAWN	
CHECKED	
APPROVED	03.04.08

KEPO
KEPO ELECTRONIC CO., LTD.
http://www.kepo.com.tw

Piezo Buzzer
KPI-3011

UNIT mm | DWG NO. KP3.840.080
SCALE NOT TO SCALE | SHEET | VER 1.1