PIN DESIGNATIONS

DESIGNATION	PIN NOS.	FUNCTION
A3, A2, A1, A0	17, 19, 1, 3	WORD A INPUTS
B3, B2, B1, B0	16, 18, 2, 4	WORD B INPUTS
S2, S1, S0	7, 6, 5	FUNCTION-SELECT INPUTS
C_n	15	CARRY INPUT FOR ADDITION, INVERTED CARRY INPUT FOR SUBTRACTION
F3, F2, F1, F0	12, 11, 9, 8	FUNCTION OUTPUTS
$\overline{P}$ ('LS381A 'S381 ONLY)	14	ACTIVE-LOW CARRY PROPAGATE OUTPUT
$\overline{G}$ ('LS381A 'S381 ONLY)	13	ACTIVE-LOW CARRY GENERATE OUTPUT
C_{n+4} ('LS382A ONLY)	14	RIPPLE-CARRY OUTPUT
OVR ('LS382A ONLY)	13	OVERFLOW OUTPUT
V_{CC}	20	SUPPLY VOLTAGE
GND	10	GROUND

SN54LS381A, SN54S381 . . . J OR W PACKAGE
SN74LS381A, SN74S381 . . . DW OR N PACKAGE
(TOP VIEW)

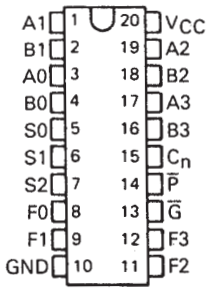

SN54LS381A, SN54S381 . . . FK PACKAGE
(TOP VIEW)

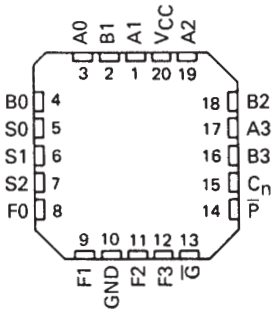

SN54LS382A . . . J OR W PACKAGE
SN74LS382A . . . DW OR N PACKAGE
(TOP VIEW)

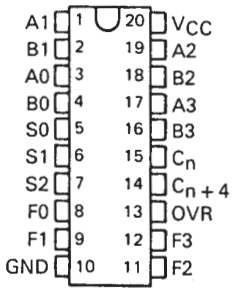

SN54LS382A . . . FK PACKAGE
(TOP VIEW)

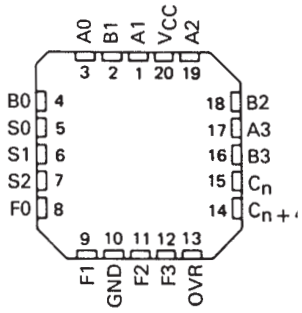

- **Fully Parallel 4-Bit ALUs in 20-Pin Package for 0.300-Inch Row Spacing**
- **Ideally Suited for High-Density Economical Processors**
- **'LS381A and 'S381 Feature $\overline{G}$ and $\overline{P}$ Outputs for Look-Ahead Carry Cascading**
- **'LS382A Features Ripple Carry (C_{n+4}) and Overflow (OVR) Outputs**
- **Arithmetic and Logic Operations Selected Specifically to Simplify System Implementation:**
  A Minus B
  B Minus A
  A Plus B
  and Five Other Functions

FUNCTION TABLE

SELECTION			ARITHMETIC/LOGIC
S2	S1	S0	OPERATION
L	L	L	CLEAR
L	L	H	B MINUS A
L	H	L	A MINUS B
L	H	H	A PLUS B
H	L	L	A ⊕ B
H	L	H	A + B
H	H	L	AB
H	H	H	PRESET

H = high level, L = low level

description

The 'LS381A, 'S381 and 'LS382A are low-power Schottky and Schottky TTL arithmetic logic units (ALUs)/function generators that perform eight binary arithmetic/logic operations on two 4-bit words as shown in the function table. The exclusive-OR, AND, or OR function of the two Boolean variables is provided without the use of external circuitry. Also, the outputs can be cleared (low) or preset (high) as desired. The 'LS381A and 'S381 provide two cascade outputs ($\overline{P}$ and $\overline{G}$ for expansion utilizing SN54S182/SN74S182 look-ahead carry generators. The 'LS382 provides a C_{n+4}) output to ripple the carry to the C_n input of the next stage. The 'LS382A detects and indicates two's complement overflow condition via the OVR output. The overflow output is logically equivalent to $C_{n+3} \oplus C_{n+4}$. When the 'LS382A is cascaded to handle word lengths longer than four bits in length, only the most significant overflow (OVR) output is used.

The SN54' family is characterized for operation over the full military temperature range of −55°C to 125°C. The SN74' family is characterized for operation from 0°C to 70°C.

PRODUCTION DATA information is current as of publication date. Products conform to specifications per the terms of Texas Instruments standard warranty. Production processing does not necessarily include testing of all parameters.

Copyright © 1988, Texas Instruments Incorporated

function table

Certain differences exist in the $\overline{G}$, $\overline{P}$ ('LS381A, 'S381) and OVR, C_{n+4} ('LS382A) function table compared with similar parts from other technologies and other vendors. No differences exist in the arithmetic modes (B minus A, A minus B, and A plus B), where these outputs perform valuable cascade functions. There are slight differences in the other modes (CLEAR, A + B, A ⊕ B, AB, and PRESET), where these outputs are strictly "don't care".

This function table is a condensed version and assumes for A_n that A0, A1, A2, and A3 inputs all agree and for B_n that B0, B1, B2, and B3 inputs all agree. This table is intended to point out the response of these $\overline{G}$, $\overline{P}$ ('LS381A, 'S381) and OVR, C_{n+4} ('LS382A) outputs in all modes of operation to facilitate incoming inspection.

FUNCTION TABLE

ARITHMETIC/LOGIC OPERATION	INPUTS						OUTPUTS				('LS381A, 'S381)		('LS382A)	
	S2	S1	S0	C_n	A_n	B_n	F3	F2	F1	F0	$\overline{G}$	$\overline{P}$	OVR	C_{n+4}
CLEAR	L	L	L	X	X	X	L	L	L	L	H	H	L	L
B MINUS A	L	L	H	L	L	L	H	H	H	H	H	L	L	L
				L	L	H	H	H	H	L	L	H	L	H
				L	H	L	L	L	L	L	H	H	L	L
				L	H	H	H	H	H	H	H	L	L	L
				H	L	L	L	L	L	L	H	L	L	H
				H	L	H	H	H	H	H	L	H	L	H
				H	H	L	L	L	L	H	H	H	L	L
				H	H	H	L	L	L	L	H	L	L	H
A MINUS B	L	H	L	L	L	L	H	H	H	H	H	L	L	L
				L	L	H	L	L	L	L	H	H	L	L
				L	H	L	H	H	H	L	L	H	L	H
				L	H	H	H	H	H	H	H	L	L	L
				H	L	L	L	L	L	L	H	L	L	H
				H	L	H	L	L	L	H	H	H	L	L
				H	H	L	H	H	H	H	L	H	L	H
				H	H	H	L	L	L	L	H	L	L	H
A PLUS B	L	H	H	L	L	L	L	L	L	L	H	H	L	L
				L	L	H	H	H	H	H	H	L	L	L
				L	H	L	H	H	H	H	H	L	L	L
				L	H	H	H	H	H	L	L	H	L	H
				H	L	L	L	L	L	H	H	H	L	L
				H	L	H	L	L	L	L	H	L	L	H
				H	H	L	L	L	L	L	H	L	L	H
				H	H	H	H	H	H	H	L	H	L	H
A ⊕ B	H	L	L	X	L	L	L	L	L	L	H	H	L	L
				L	L	H	H	H	H	H	H	L	L	L
				H	L	H	H	H	H	H	H	L	H	H
				L	H	L	H	H	H	H	H	L	L	L
				H	H	L	H	H	H	H	H	L	H	H
				X	H	H	L	L	L	L	H	H	L	L
A + B	H	L	H	X	L	L	L	L	L	L	H	H	L	L
				L	L	H	H	H	H	H	H	L	L	L
				H	L	H	H	H	H	H	H	L	H	H
				L	H	L	H	H	H	H	H	L	L	L
				H	H	L	H	H	H	H	H	L	H	H
				L	H	H	H	H	H	H	H	L	L	L
				H	H	H	H	H	H	H	H	L	H	H
AB	H	H	L	X	L	L	L	L	L	L	H	H	L	L
				X	L	H	L	L	L	L	H	H	L	L
				X	H	L	L	L	L	L	H	H	L	L
				L	H	H	H	H	H	H	H	L	L	L
				H	H	H	H	H	H	H	H	L	H	H
PRESET	H	H	H	L	X	X	H	H	H	H	H	L	L	L
				H	X	X	H	H	H	H	H	L	H	H

logic diagram (positive logic)

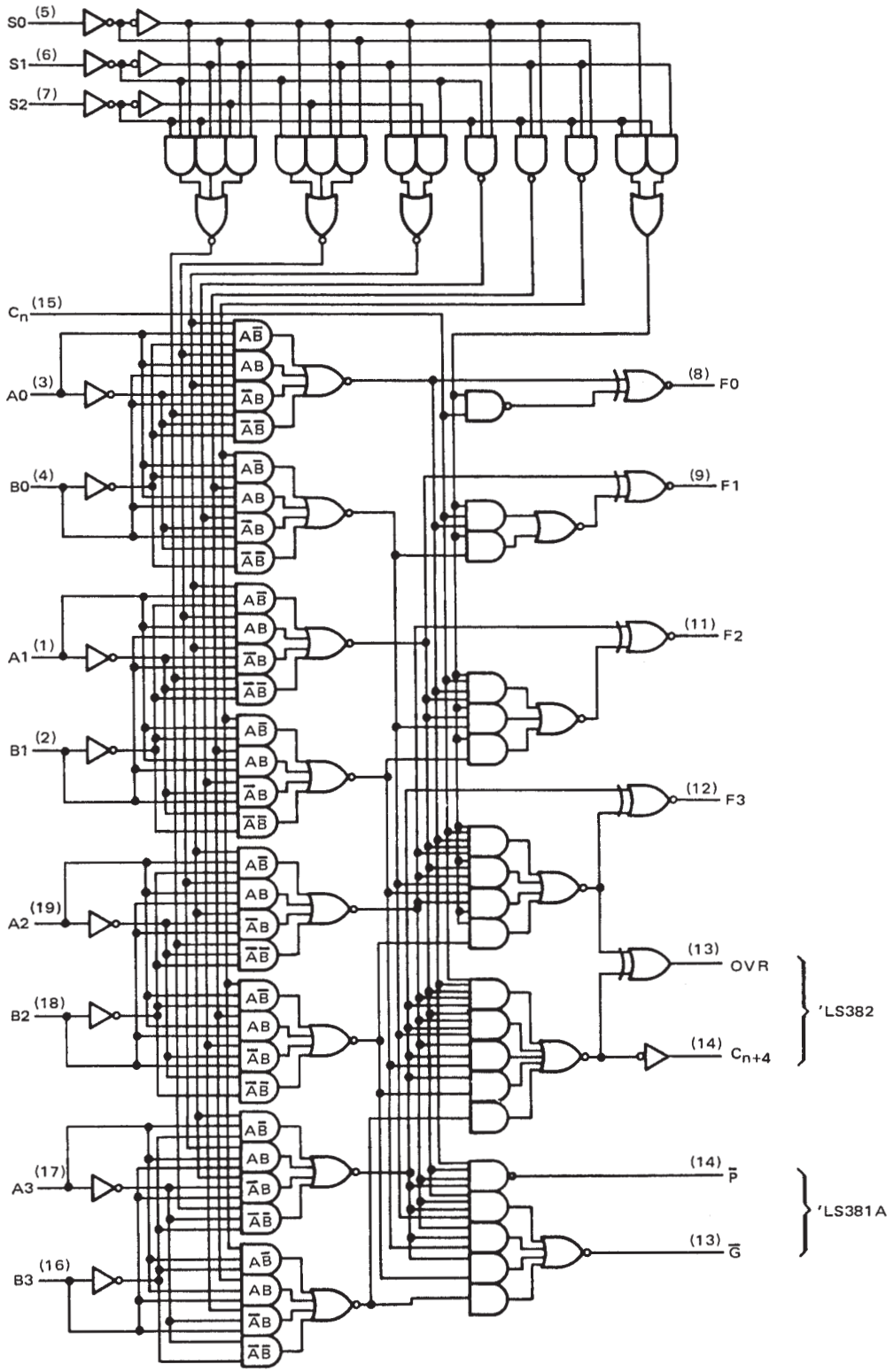

Pin numbers shown are for DW, J, N, and W packages.

logic diagram and schematics of inputs and outputs

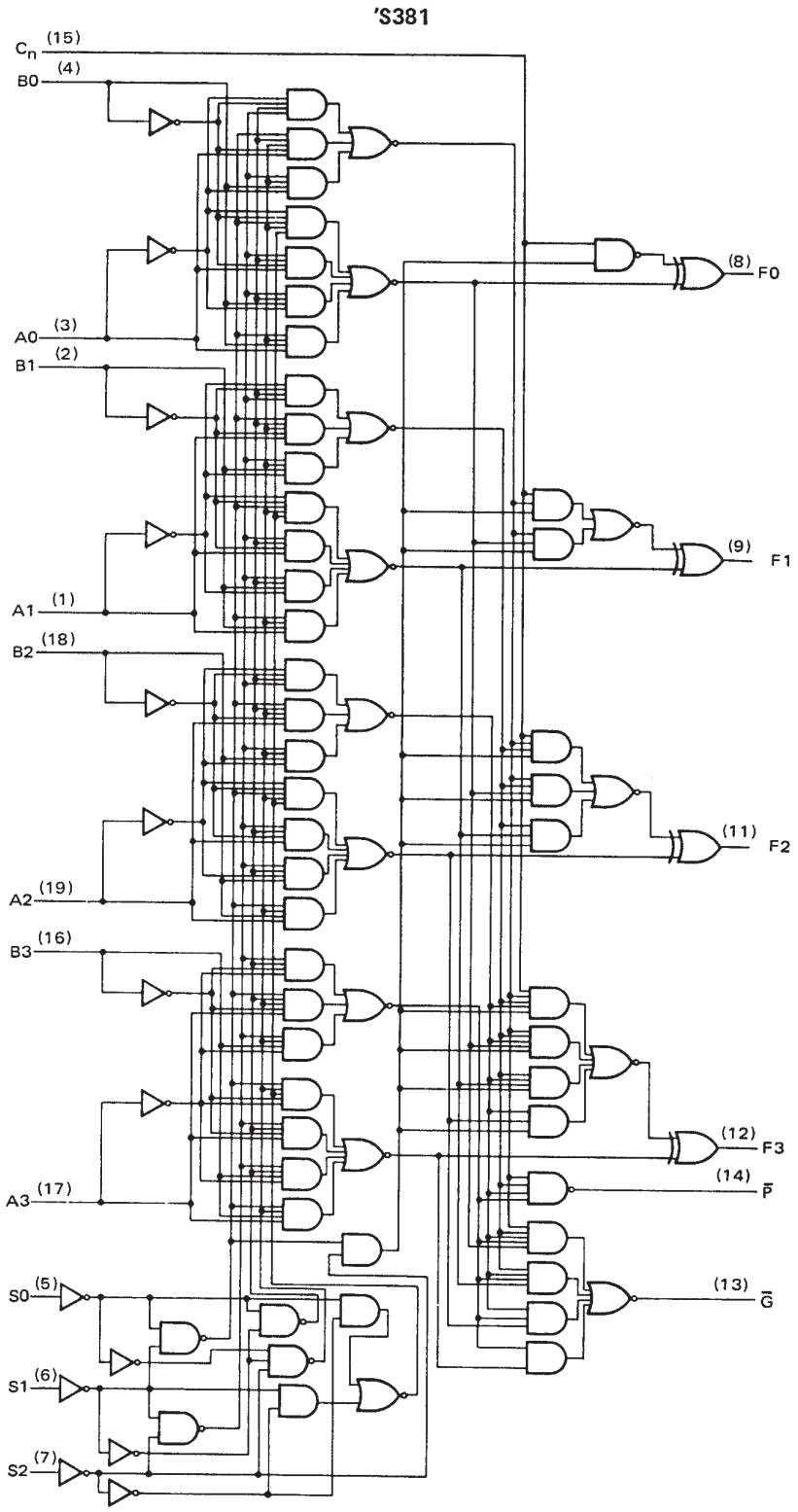

Pin numbers shown are for DW, J, N, and W packages.

logic symbols†

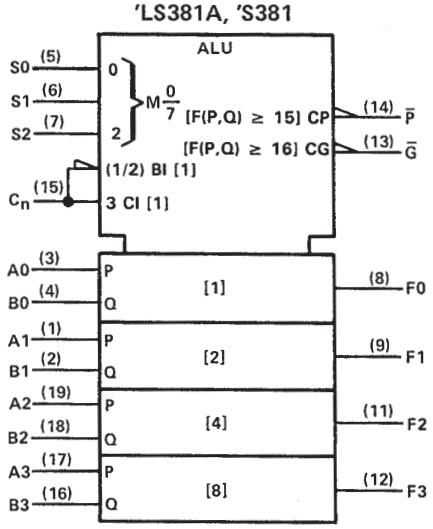

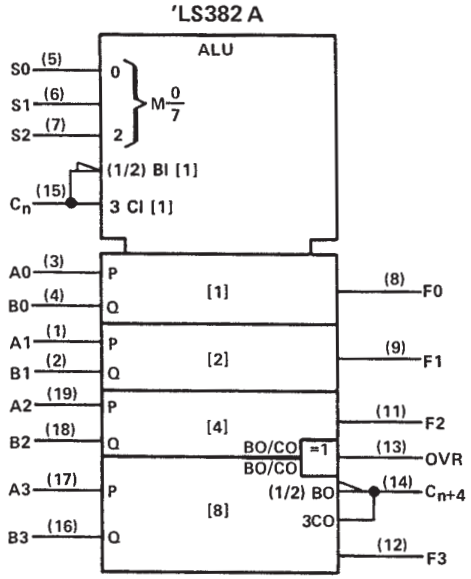

†These symbols are in accordance with ANSI/IEEE Std 91-1984 and IEC Publication 617-12.
Pin numbers shown are for DW, J, N, and W packages.

schematics of inputs and outputs

'LS381, 'LS382A

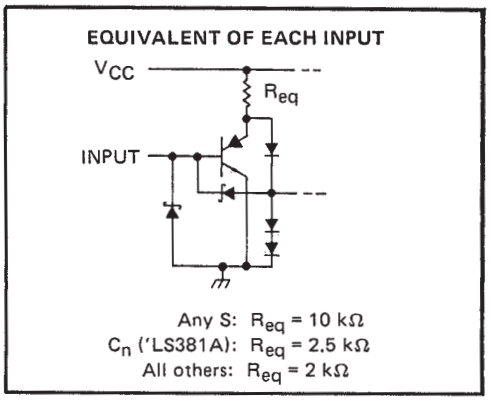

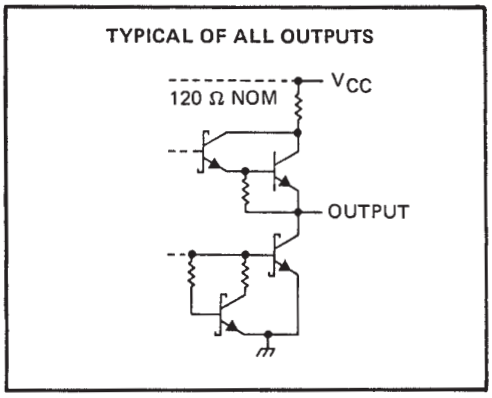

'S381

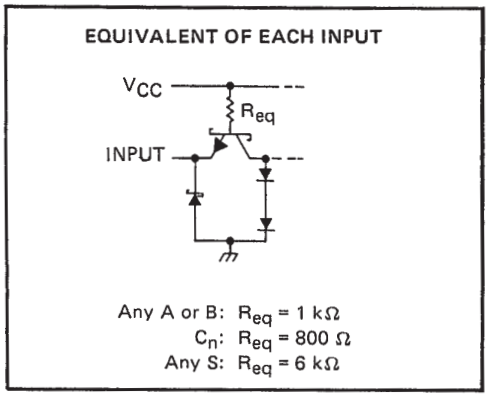

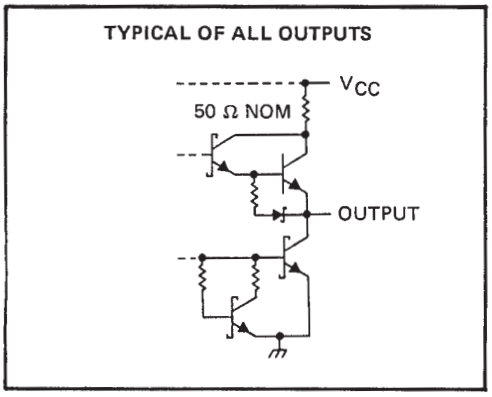

absolute maximum ratings over operating free-air temperature range (unless otherwise noted)

Supply voltage, V_{CC} (See Note 1) . . . . . 7 V
Input voltage . . . . . 7 V
Operating free-air temperature range: SN54LS381A, SN54LS382A . . . . . −55°C to 125°C
SN74LS381A, SN74LS382A . . . . . 0°C to 70°C
Storage temperature range . . . . . −65°C to 150°C

NOTE 1: Voltage values are with respect to the network ground terminal.

recommended operating conditions

			SN54LS'			SN74LS'			UNIT
			MIN	NOM	MAX	MIN	NOM	MAX	
V_{CC}	Supply voltage		4.5	5	5.5	4.75	5	5.25	V
V_{IH}	High-level input voltage		2			2			V
V_{IL}	Low-level input voltage				0.7			0.8	V
I_{OH}	High-level output current				−0.4			−0.4	mA
I_{OL}	Low-level output current	$\overline{G}$ output of 'LS381A			16			16	mA
		All other outputs			4			8	
T_A	Operating free-air temperature		−55		125	0		70	°C

electrical characteristics over recommended operating free-air temperature range (unless otherwise noted)

PARAMETER		TEST CONDITIONS†		SN54LS'			SN74LS'			UNIT
				MIN	TYP‡	MAX	MIN	TYP‡	MAX	
V_{IK}		V_{CC} = MIN, I_I = −18 mA				−1.5			−1.5	V
V_{OH}		V_{CC} = MIN, V_{IH} = 2 V, V_{IL} = MAX, I_{OH} = −0.4 mA		2.5	3.4		2.7	3.4		V
V_{OL}	$\overline{G}$ ('LS381A)	V_{CC} = MIN, V_{IH} = 2 V, V_{IL} = MAX	I_{OL} = 16 mA		0.47	0.7		0.47	0.7	V
	Other outputs		I_{OL} = 4 mA		0.25	0.4		0.25	0.4	
			I_{OL} = 8 mA					0.35	0.5	
I_I		V_{CC} = MAX, V_I = 7 V				0.1			0.1	mA
I_{IH}	Any S	V_{CC} = MAX, V_I = 2.7 V				20			20	μA
	Any A or B					100			100	
	C_n ('LS381A)					80			80	
	C_n ('LS382A)					100			100	
I_{IL}	Any S	V_{CC} = MAX, V_I = 0.4 V				−0.2			−0.2	mA
	Any A or B					−1			−1	
	C_n ('LS381A)					−0.8			−0.8	
	C_n ('LS382A)					−0.8			−0.8	
I_{OS}§		V_{CC} = MAX		−20		−100	−20		−100	mA
I_{CC}		V_{CC} = MAX, All inputs grounded, outputs open			35	65		35	65	mA

† For conditions shown as MIN or MAX, use the appropriate value specified under recommended operating conditions.
‡ All typical values are at V_{CC} = 5 V, T_A = 25°C.
§ Not more than one output should be shorted at a time, and duration of the short circuit should not exceed one second.

switching characteristics, V_{CC} = 5 V, T_A = 25°C (see note 3)

PARAMETER	FROM (INPUT)	TO (OUTPUT)	TEST CONDITIONS	'LS381A			'LS382			UNIT
				MIN	TYP	MAX	MIN	TYP	MAX	
t_{PLH}	Cn	Any F	R_L = 2 kΩ, C_L = 15 pF		18	27		18	27	ns
t_{PHL}					14	21		14	21	
t_{PLH}	Any A or B	$\overline{G}$			20	30				ns
t_{PHL}					21	33				
t_{PLH}	Any A or B	$\overline{P}$			21	33				ns
t_{PHL}					23	33				
t_{PLH}	A_i or B_i	F_i			20	30		20	30	ns
t_{PHL}					15	23		15	23	
t_{PLH}	S0, S1, S2	F_i			35	53		35	53	ns
t_{PHL}					34	51		34	51	
t_{PLH}	S0, S1, S2	$\overline{G}$ or $\overline{P}$			31	47				ns
t_{PHL}					32	48				
t_{PLH}	Any A or B	C_{n+4}						28	42	ns
t_{PHL}								26	39	
t_{PLH}	Any A or B	OVR						23	35	ns
t_{PHL}								27	41	
t_{PLH}	S0, S1, S2	C_{n+4} or OVR						38	57	ns
t_{PHL}								36	54	
t_{PLH}	C_n	OVR						10	15	ns
t_{PHL}								13	23	
t_{PLH}	C_n	C_{n+4}						13	21	ns
t_{PHL}								11	20	

NOTE 3: Load circuits and voltage waveforms are shown in Section 1.

absolute maximum ratings over operating free-air temperature range (unless otherwise noted)

Supply voltage, V_{CC} (see Note 1) . . . . . 7 V
Input voltage . . . . . 5.5 V
Interemitter voltage (see Note 2) . . . . . 5.5 V
Operating free-air temperature range: SN54S381 . . . . . –55°C to 125°C
SN74S381 . . . . . 0°C to 70°C
Storage free-air temperature range . . . . . –65°C to 150°C

NOTES: 1. Voltage values, except interemitter voltage, are with respect to network ground terminal.
2. This is the voltage between two emitters of a multiple-emitter transistor. For this circuit, this rating applies to each A input in conjunction with its respective B input; for example A0 with B0, etc.

recommended operating conditions

	SN54S381			SN74S381			UNIT
	MIN	NOM	MAX	MIN	NOM	MAX	
Supply voltage, V_{CC}	4.5	5	5.5	4.75	5	5.25	V
High-level output current, I_{OH}			–1			–1	mA
Low-level output current, I_{OL}			20			20	mA
Operating free-air temperature, T_A	–55		125	0		70	°C

electrical characteristics over recommended operating free-air temperature range (unless otherwise noted)

PARAMETER			TEST CONDITIONS†	MIN	TYP‡	MAX	UNIT
V_{IH}	High-level input voltage			2			V
V_{IL}	Low-level input voltage					0.8	V
V_{IK}	Input clamp voltage		V_{CC} = MIN, I_I = –18 mA			–1.2	V
V_{OH}	High-level output voltage	SN54S381	V_{CC} = MIN, V_{IH} = 2 V, V_{IL} = 0.8 V, I_{OH} = –1 mA	2.4	3.4		V
		SN74S381		2.7	3.4		
V_{OL}	Low-level output voltage		V_{CC} = MIN, V_{IH} = 2 V, V_{IL} = 0.8 V, I_{OL} = 20 mA			0.5	V
I_I	Input current at maximum input voltage		V_{CC} = MAX, V_I = 5.5 V			1	mA
I_{IH}	High-level input current	Any S input	V_{CC} = MAX, V_I = 2.7 V			50	μA
		C_n				250	
		All others				200	
I_{IL}	Low-level input current	Any S input	V_{CC} = MAX, V_I = 0.5 V			–2	mA
		C_n				–8	
		All others				–6	
I_{OS}	Short-circuit output current§		V_{CC} = MAX	–40		–100	mA
I_{CC}	Supply current		V_{CC} = MAX		105	160	mA

†For conditions shown as MIN or MAX, use the appropriate value specified under recommended operating conditions.
‡All typical values are at V_{CC} = 5 V, T_A = 25°C.
§Not more than one output should be shorted at a time.

switching characteristics, V_{CC} = 5 V, T_A = 25°C

PARAMETER	FROM (INPUT)	TO (OUTPUT)	TEST CONDITIONS	MIN	TYP	MAX	UNIT
t_{PLH}	C_n	Any F	C_L = 15 pF, R_L = 280 Ω, See Note 3		10	17	ns
t_{PHL}					10	17	
t_{PLH}	Any A or B	$\overline{G}$			12	20	ns
t_{PHL}					12	20	
t_{PLH}	Any A or B	$\overline{P}$			11	18	ns
t_{PHL}					11	18	
t_{PLH}	A_i or B_i	F_i			18	27	ns
t_{PHL}					16	25	
t_{PLH}	Any S	Any			18	30	ns
t_{PHL}					18	30	

NOTE 3: Load circuits and voltage waveforms are shown in Section 1.

IMPORTANT NOTICE

Texas Instruments and its subsidiaries (TI) reserve the right to make changes to their products or to discontinue any product or service without notice, and advise customers to obtain the latest version of relevant information to verify, before placing orders, that information being relied on is current and complete. All products are sold subject to the terms and conditions of sale supplied at the time of order acknowledgement, including those pertaining to warranty, patent infringement, and limitation of liability.

TI warrants performance of its semiconductor products to the specifications applicable at the time of sale in accordance with TI's standard warranty. Testing and other quality control techniques are utilized to the extent TI deems necessary to support this warranty. Specific testing of all parameters of each device is not necessarily performed, except those mandated by government requirements.

CERTAIN APPLICATIONS USING SEMICONDUCTOR PRODUCTS MAY INVOLVE POTENTIAL RISKS OF DEATH, PERSONAL INJURY, OR SEVERE PROPERTY OR ENVIRONMENTAL DAMAGE ("CRITICAL APPLICATIONS"). TI SEMICONDUCTOR PRODUCTS ARE NOT DESIGNED, AUTHORIZED, OR WARRANTED TO BE SUITABLE FOR USE IN LIFE-SUPPORT DEVICES OR SYSTEMS OR OTHER CRITICAL APPLICATIONS. INCLUSION OF TI PRODUCTS IN SUCH APPLICATIONS IS UNDERSTOOD TO BE FULLY AT THE CUSTOMER'S RISK.

In order to minimize risks associated with the customer's applications, adequate design and operating safeguards must be provided by the customer to minimize inherent or procedural hazards.

TI assumes no liability for applications assistance or customer product design. TI does not warrant or represent that any license, either express or implied, is granted under any patent right, copyright, mask work right, or other intellectual property right of TI covering or relating to any combination, machine, or process in which such semiconductor products or services might be or are used. TI's publication of information regarding any third party's products or services does not constitute TI's approval, warranty or endorsement thereof.

Copyright © 1999, Texas Instruments Incorporated