SDLS028

SN5403, SN54LS03, SN54S03, SN7403, SN74LS03, SN74S03
QUADRUPLE 2-INPUT POSITIVE-NAND GATES WITH OPEN-COLLECTOR OUTPUTS

DECEMBER 1983—REVISED MARCH 1988

- **Package Options Include Plastic "Small Outline" Packages, Ceramic Chip Carriers and Flat Packages, and Plastic and Ceramic DIPs**
- **Dependable Texas Instruments Quality and Reliability**

description

These devices contain four independent 2-input-NAND gates. The open-collector outputs require pull-up resistors to perform correctly. They may be connected to other open-collector outputs to implement active-low wired-OR or active-high wired-AND functions. Open-collector devices are often used to generate higher V_{OH} levels.

The SN5403, SN54LS03 and SN54S03 are characterized for operation over the full military temperature range of −55°C to 125°C. The SN7403, SN74LS03 and SN74S03 are characterized for operation from 0°C to 70°C.

FUNCTION TABLE (each gate)

INPUTS		OUTPUT
A	B	Y
H	H	L
L	X	H
X	L	H

SN5403 . . . J OR W PACKAGE
SN54LS03, SN54S03 . . . J OR W PACKAGE
SN7403 . . . N PACKAGE
SN74LS03, SN74S03 . . . D OR N PACKAGE
(TOP VIEW)

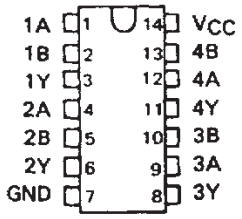

SN54LS03, SN54S03 . . . FK PACKAGE
(TOP VIEW)

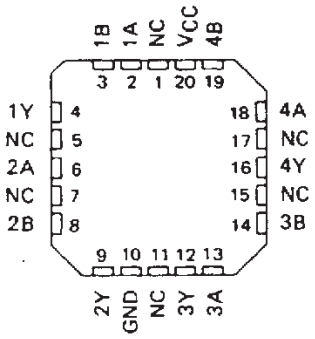

NC – No internal connection

logic symbol†

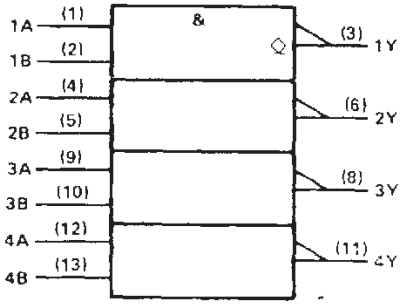

† This symbol is in accordance with ANSI/IEEE Std 91-1984 and IEC Publication 617-12.
Pin numbers shown are for D, J, N, and W packages.

logic diagram (positive logic)

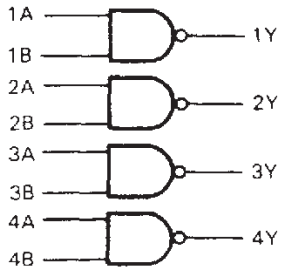

$Y = \overline{A \cdot B}$ or $Y = \overline{A} + \overline{B}$

PRODUCTION DATA documents contain information current as of publication date. Products conform to specifications per the terms of Texas Instruments standard warranty. Production processing does not necessarily include testing of all parameters.

TEXAS INSTRUMENTS
POST OFFICE BOX 655012 • DALLAS, TEXAS 75265

schematics (each gate)

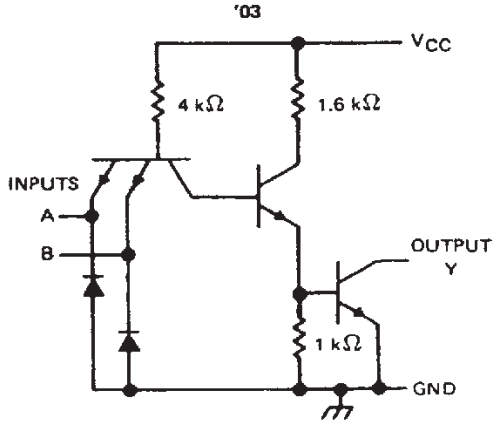

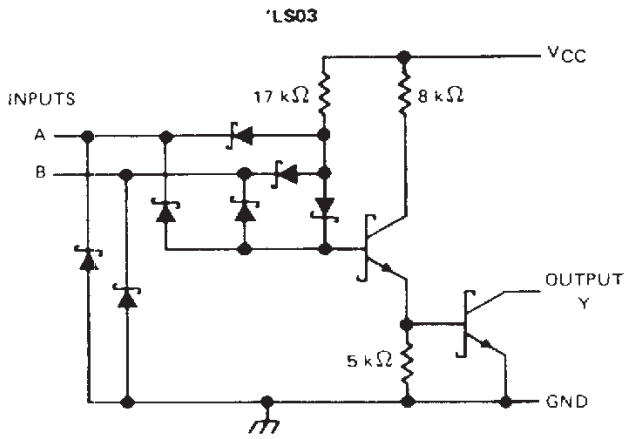

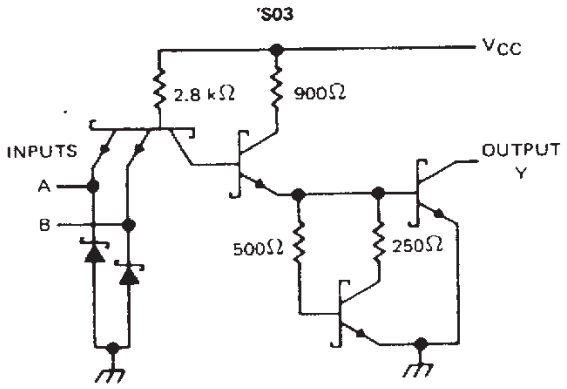

Resistor values shown are nominal.

absolute maximum ratings over operating free-air temperature range (unless otherwise noted)

Supply voltage, V_{CC} (see Note 1)		7 V
Input voltage: '03, 'S03		5.5 V
'LS03		7 V
Off-state output voltage		7 V
Operating free-air temperature range:	SN54'	−55°C to 125°C
	SN74'	0°C to 70°C
Storage temperature range		−65°C to 150°C

NOTE 1: Voltage values are with respect to network ground terminal.

recommended operating conditions

		SN5403			SN7403			UNIT
		MIN	NOM	MAX	MIN	NOM	MAX	
V_{CC}	Supply voltage	4.5	5	5.5	4.75	5	5.25	V
V_{IH}	High-level input voltage	2			2			V
V_{IL}	Low-level input voltage			0.8			0.8	V
V_{OH}	High-level output voltage			5.5			5.5	V
I_{OL}	Low-level output current			16			16	mA
T_A	Operating free-air temperature	−55		125	0		70	°C

electrical characteristics over recommended operating free-air temperature range (unless otherwise noted)

PARAMETER	TEST CONDITIONS†	SN5403			SN7403			UNIT
		MIN	TYP‡	MAX	MIN	TYP‡	MAX	
V_{IK}	V_{CC} = MIN, I_I = −12 mA			−1.5			−1.5	V
I_{OH}	V_{CC} = MIN, V_{IL} = 0.8 V, V_{OH} = 5.5 V						0.25	mA
	V_{CC} = MIN, V_{IL} = 0.7 V, V_{OH} = 5.5 V			0.25				
V_{OL}	V_{CC} = MIN, V_{IH} = 2 V, I_{OL} = 16 mA		0.2	0.4		0.2	0.4	V
I_I	V_{CC} = MAX, V_I = 5.5 V			1			1	mA
I_{IH}	V_{CC} = MAX, V_I = 2.4 V			40			40	μA
I_{IL}	V_{CC} = MAX, V_I = 0.4 V			−1.6			−1.6	mA
I_{CCH}	V_{CC} = MAX, V_I = 0		4	8		4	8	mA
I_{CCL}	V_{CC} = MAX, V_I = 4.5 V		12	22		12	22	mA

†For conditions shown as MIN or MAX, use the appropriate value specified under recommended operating conditions.
‡All typical values are at V_{CC} = 5 V, T_A = 25°C.

switching characteristics, V_{CC} = 5 V, T_A = 25°C (see note 2)

PARAMETER	FROM (INPUT)	TO (OUTPUT)	TEST CONDITIONS		MIN	TYP	MAX	UNIT
t_{PLH}	A or B	Y	R_L = 4 kΩ,	C_L = 15 pF		35	45	ns
t_{PHL}			R_L = 400 Ω,	C_L = 15 pF		8	15	ns

NOTE 2: Load circuits and voltage waveforms are shown in Section 1.

recommended operating conditions

	SN54LS03			SN74LS03			UNIT
	MIN	NOM	MAX	MIN	NOM	MAX	
V_{CC} Supply voltage	4.5	5	5.5	4.75	5	5.25	V
V_{IH} High-level input voltage	2			2			V
V_{IL} Low-level input voltage			0.7			0.8	V
V_{OH} High-level output voltage			5.5			5.5	V
I_{OL} Low-level output current			4			8	mA
T_A Operating free-air temperature	−55		125	0		70	°C

electrical characteristics over recommended operating free-air temperature range (unless otherwise noted)

PARAMETER	TEST CONDITIONS†			SN54LS03			SN74LS03			UNIT
				MIN	TYP‡	MAX	MIN	TYP‡	MAX	
V_{IK}	V_{CC} = MIN,	I_I = −18 mA				−1.5			−1.5	V
I_{OH}	V_{CC} = MIN,	V_{IL} = MAX,	V_{OH} = 5.5 V			0.1			0.1	mA
V_{OL}	V_{CC} = MIN,	V_{IH} = 2 V,	I_{OL} = 4 mA		0.25	0.4		0.25	0.4	V
	V_{CC} = MIN,	V_{IH} = 2 V,	I_{OL} = 8 mA					0.35	0.5	
I_I	V_{CC} = MAX,	V_I = 7 V				0.1			0.1	mA
I_{IH}	V_{CC} = MAX,	V_I = 2.7 V				20			20	μA
I_{IL}	V_{CC} = MAX,	V_I = 0.4 V				−0.4			−0.4	mA
I_{CCH}	V_{CC} = MAX,	V_I = 0			0.8	1.6		0.8	1.6	mA
I_{CCL}	V_{CC} = MAX,	V_I = 4.5 V			2.4	4.4		2.4	4.4	mA

† For conditions shown as MIN or MAX, use the appropriate value specified under recommended operating conditions.
‡ All typical values are at V_{CC} = 5 V, T_A = 25°C.

switching characteristics, V_{CC} = 5 V, T_A = 25°C (see note 2)

PARAMETER	FROM (INPUT)	TO (OUTPUT)	TEST CONDITIONS		MIN	TYP	MAX	UNIT
t_{PLH}	A or B	Y	R_L = 2 kΩ,	C_L = 15 pF		17	32	ns
t_{PHL}						15	28	ns

NOTE 2: Load circuits and voltage waveforms are shown in Section 1.

recommended operating conditions

		SN54S03			SN74S03			UNIT
		MIN	NOM	MAX	MIN	NOM	MAX	
V_{CC}	Supply voltage	4.5	5	5.5	4.75	5	5.25	V
V_{IH}	High-level input voltage	2			2			V
V_{IL}	Low-level input voltage			0.8			0.8	V
V_{OH}	High-level output voltage			5.5			5.5	V
I_{OL}	Low-level output current			20			20	mA
T_A	Operating free-air temperature	−55		125	0		70	°C

electrical characteristics over recommended operating free-air temperature range (unless otherwise noted)

PARAMETER	TEST CONDITIONS†	SN54S03			SN74S03			UNIT
		MIN	TYP‡	MAX	MIN	TYP‡	MAX	
V_{IK}	V_{CC} = MIN, I_I = −18 mA			−1.2			−1.2	V
I_{OH}	V_{CC} = MIN, V_{IL} = 0.8 V, V_{OH} = 5.5 V						0.25	mA
	V_{CC} = MIN, V_{IL} = 0.7 V, V_{OH} = 5.5 V			0.25				
V_{OL}	V_{CC} = MIN, V_{IH} = 2 V, I_{OL} = 20 mA			0.5			0.5	V
I_I	V_{CC} = MAX, V_I = 5.5 V			1			1	mA
I_{IH}	V_{CC} = MAX, V_I = 2.7 V			50			50	μA
I_{IL}	V_{CC} = MAX, V_I = 0.5 V			−2			−2	mA
I_{CCH}	V_{CC} = MAX, V_I = 0		6	13.2		6	13.2	mA
I_{CCL}	V_{CC} = MAX, V_I = 4.5 V		20	36		20	36	mA

†For conditions shown as MIN or MAX, use the appropriate value specified under recommended operating conditions.
‡All typical values are at V_{CC} = 5 V, T_A = 25°C.

switching characteristics, V_{CC} = 5 V, T_A = 25°C (see note 2)

PARAMETER	FROM (INPUT)	TO (OUTPUT)	TEST CONDITIONS	MIN	TYP	MAX	UNIT
t_{PLH}	A or B	Y	R_L = 280 Ω, C_L = 15 pF	2	5	7.5	ns
t_{PHL}				2	4.5	7	ns
t_{PLH}			R_L = 280 Ω, C_L = 50 pF		7.5		ns
t_{PHL}					7		ns

NOTE 2. Load circuits and voltage waveforms are shown in Section 1.

IMPORTANT NOTICE

Texas Instruments and its subsidiaries (TI) reserve the right to make changes to their products or to discontinue any product or service without notice, and advise customers to obtain the latest version of relevant information to verify, before placing orders, that information being relied on is current and complete. All products are sold subject to the terms and conditions of sale supplied at the time of order acknowledgement, including those pertaining to warranty, patent infringement, and limitation of liability.

TI warrants performance of its semiconductor products to the specifications applicable at the time of sale in accordance with TI's standard warranty. Testing and other quality control techniques are utilized to the extent TI deems necessary to support this warranty. Specific testing of all parameters of each device is not necessarily performed, except those mandated by government requirements.

CERTAIN APPLICATIONS USING SEMICONDUCTOR PRODUCTS MAY INVOLVE POTENTIAL RISKS OF DEATH, PERSONAL INJURY, OR SEVERE PROPERTY OR ENVIRONMENTAL DAMAGE ("CRITICAL APPLICATIONS"). TI SEMICONDUCTOR PRODUCTS ARE NOT DESIGNED, AUTHORIZED, OR WARRANTED TO BE SUITABLE FOR USE IN LIFE-SUPPORT DEVICES OR SYSTEMS OR OTHER CRITICAL APPLICATIONS. INCLUSION OF TI PRODUCTS IN SUCH APPLICATIONS IS UNDERSTOOD TO BE FULLY AT THE CUSTOMER'S RISK.

In order to minimize risks associated with the customer's applications, adequate design and operating safeguards must be provided by the customer to minimize inherent or procedural hazards.

TI assumes no liability for applications assistance or customer product design. TI does not warrant or represent that any license, either express or implied, is granted under any patent right, copyright, mask work right, or other intellectual property right of TI covering or relating to any combination, machine, or process in which such semiconductor products or services might be or are used. TI's publication of information regarding any third party's products or services does not constitute TI's approval, warranty or endorsement thereof.

Copyright © 1998, Texas Instruments Incorporated