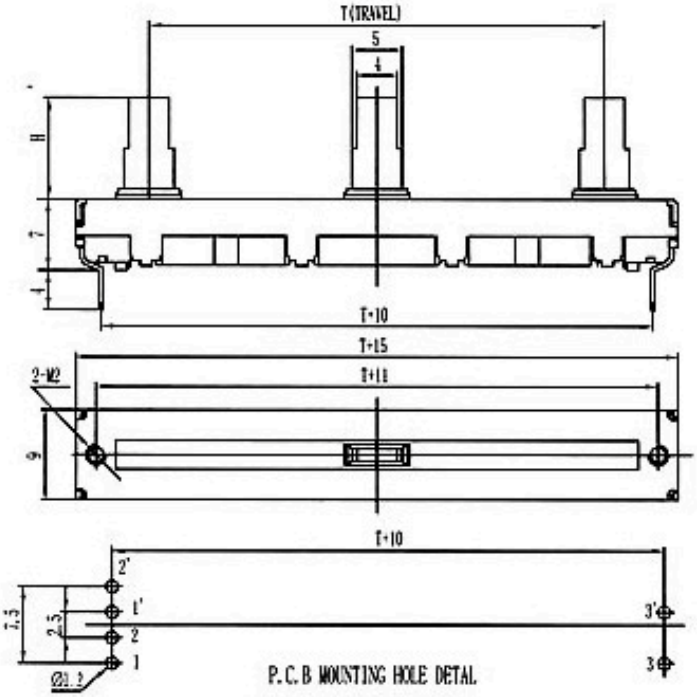

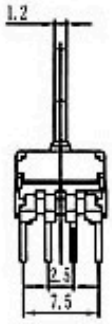

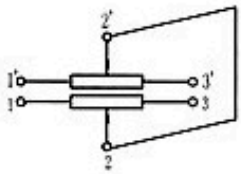

CIRCUIT:G0

T	45	60		
H	10	15	20	

Resistance range	500Ω TO 1MΩ						
Tolerance of resistance	±20%						
Resistance(law) taper	ABCDW						
Power Rating	Taper \ Travel		10mm	15mm	20mm	30mm	45-60mm
	B	Single	0.05	0.05	0.1	0.2	0.25
		Dual	0.025	0.025	0.05	0.1	0.125
	Except B	Single	0.025	0.025	0.5	0.1	0.125
		Dual	0.012	0.012	0.025	0.05	0.05
Rated voltage	直线 B		100	100	200	200	200
	Except B		50	50	150	150	150
Insulation resistance	10MΩ Min AT 250V DC						
Withstanding Voltage	1Min,AT 250V AC						
Operating force	10~120gf.cm						
Click slip-out force(only center click)	+20~150gf,cm						
Sliding life	10,000 Cycles						