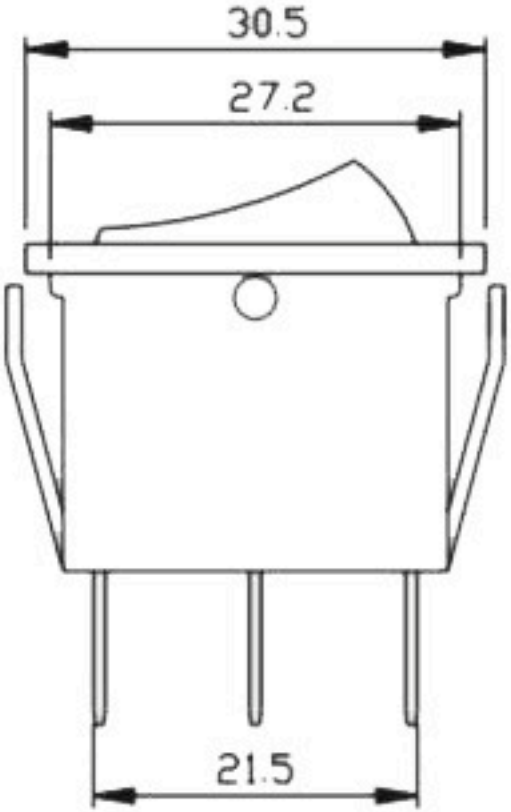
30.5
27.2
21.5

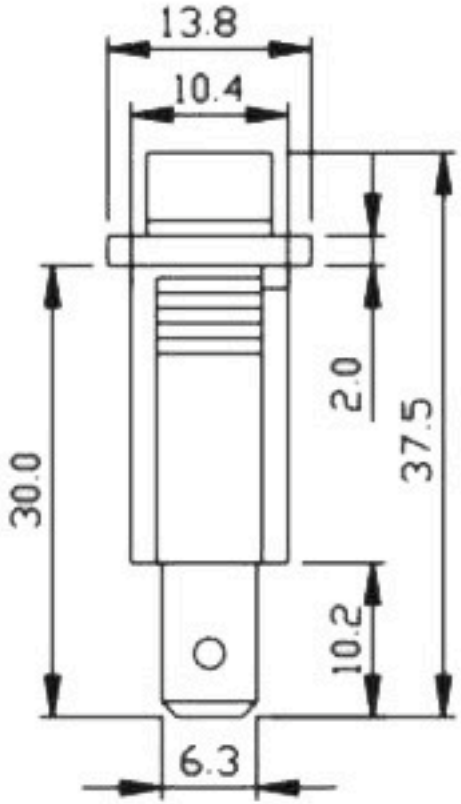
13.8
10.4
2.0
37.5
30.0
10.2
6.3