- **3-State Outputs Drive Bus Lines or Buffer Memory Address Registers**
- **Choice of True or Inverting Outputs**
- **Package Options Include Plastic "Small Outline" Packages, Ceramic Chip Carriers and Flat Packages, and Plastic and Ceramic DIPs**
- **Dependable Texas Instruments Quality and Reliability**

'365A, '367A, 'LS365A, 'LS367A True Outputs '366A, '368A, 'LS366A, 'LS368A Inverting Outputs

description

These Hex buffers and line drivers are designed specifically to improve both the performance and density of three-state memory address drivers, clock drivers, and bus oriented receivers and transmitters. The designer has choice of selected combinations of inverting and noninverting outputs, symmetrical $\overline{G}$ (active-low control) inputs.

These devices feature high fan-out, improved fan-in, and can be used to drive terminated lines down to 133 ohms.

The SN54365A thru SN54368A and SN54LS365A thru SN54LS368A are characterized for operation over the full military temperature range of −55°C to 125°C. The SN74365A thru SN74368A and SN74LS365A thru SN74LS368A are characterized for operation from 0°C to 70°C.

SN54365A, 366A, SN54LS365A, 366A . . . J PACKAGE
SN74365A, 366A . . . N PACKAGE
SN74LS365A, SN74LS366A . . . D OR N PACKAGE
(TOP VIEW)

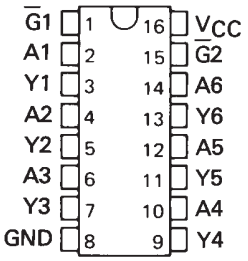

SN54LS365A, SN54LS366A . . . FK PACKAGE
(TOP VIEW)

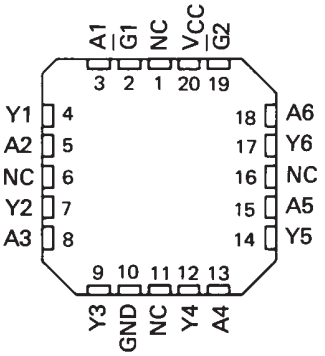

SN54367A, 368A, SN54LS367A, 368A . . . J PACKAGE
SN74367A, 368A . . . N PACKAGE
SN74LS367A, SN74LS368A . . . D OR N PACKAGE
(TOP VIEW)

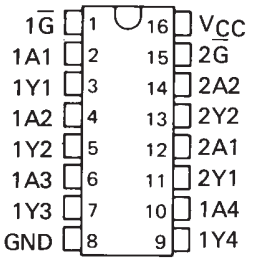

SN54LS367A, SN54LS368A . . . FK PACKAGE
(TOP VIEW)

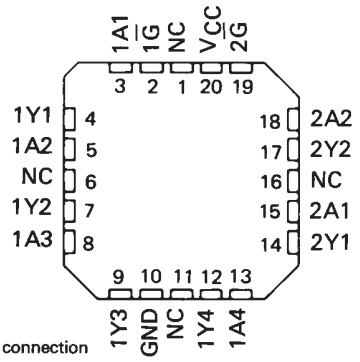

NC – No internal connection

PRODUCTION DATA documents contain information current as of publication date. Products conform to specifications per the terms of Texas Instruments standard warranty. Production processing does not necessarily include testing of all parameters.

schematics of inputs and outputs

'365A thru '368A

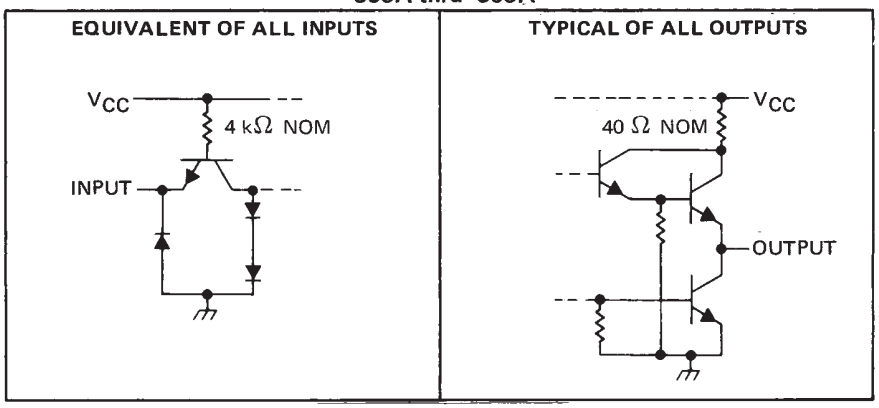

'LS365A thru 'LS368A

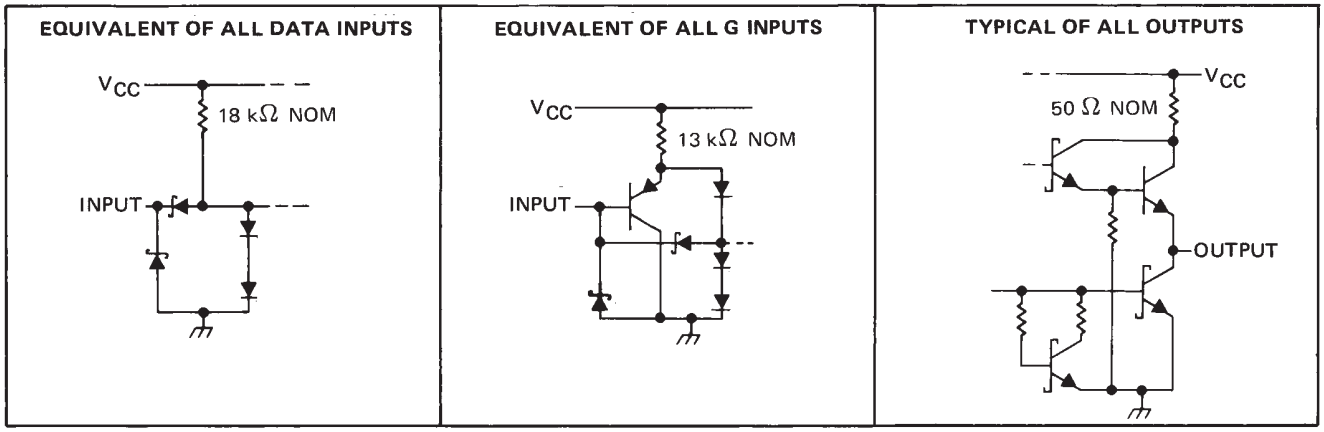

logic diagrams (positive logic)

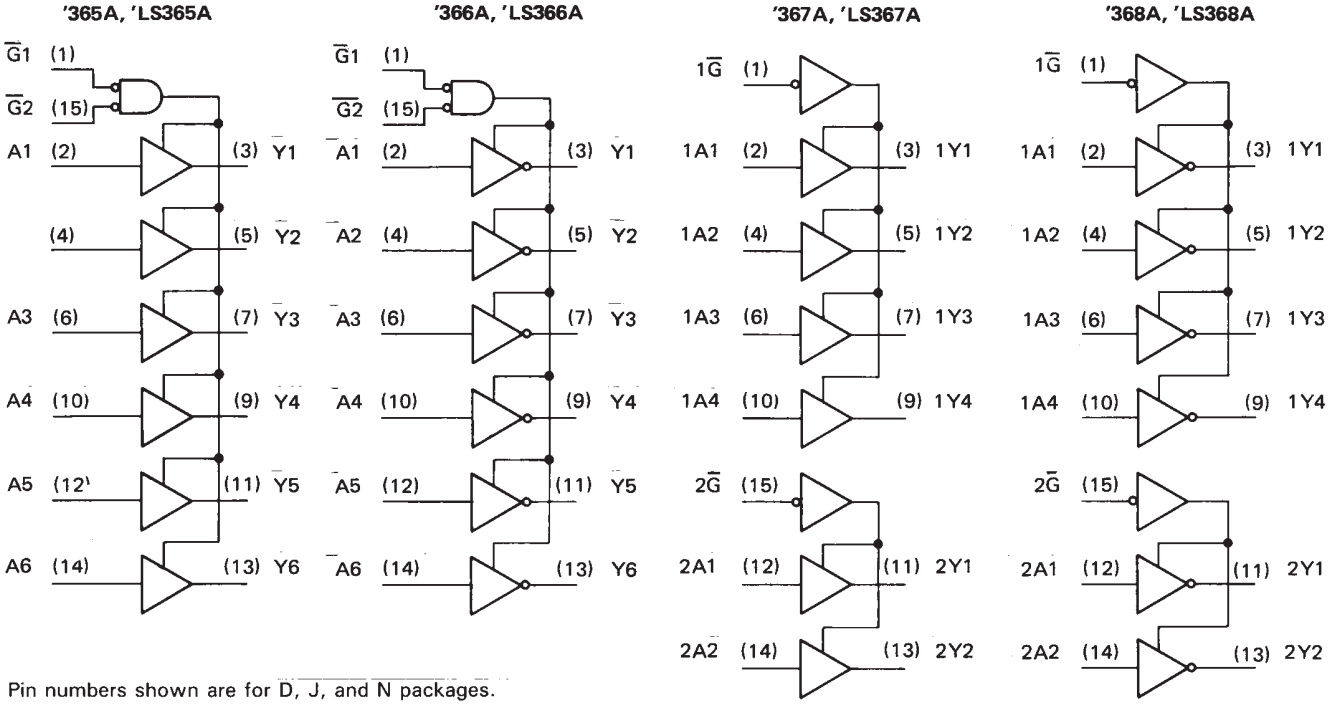

Pin numbers shown are for D, J, and N packages.

logic symbols†

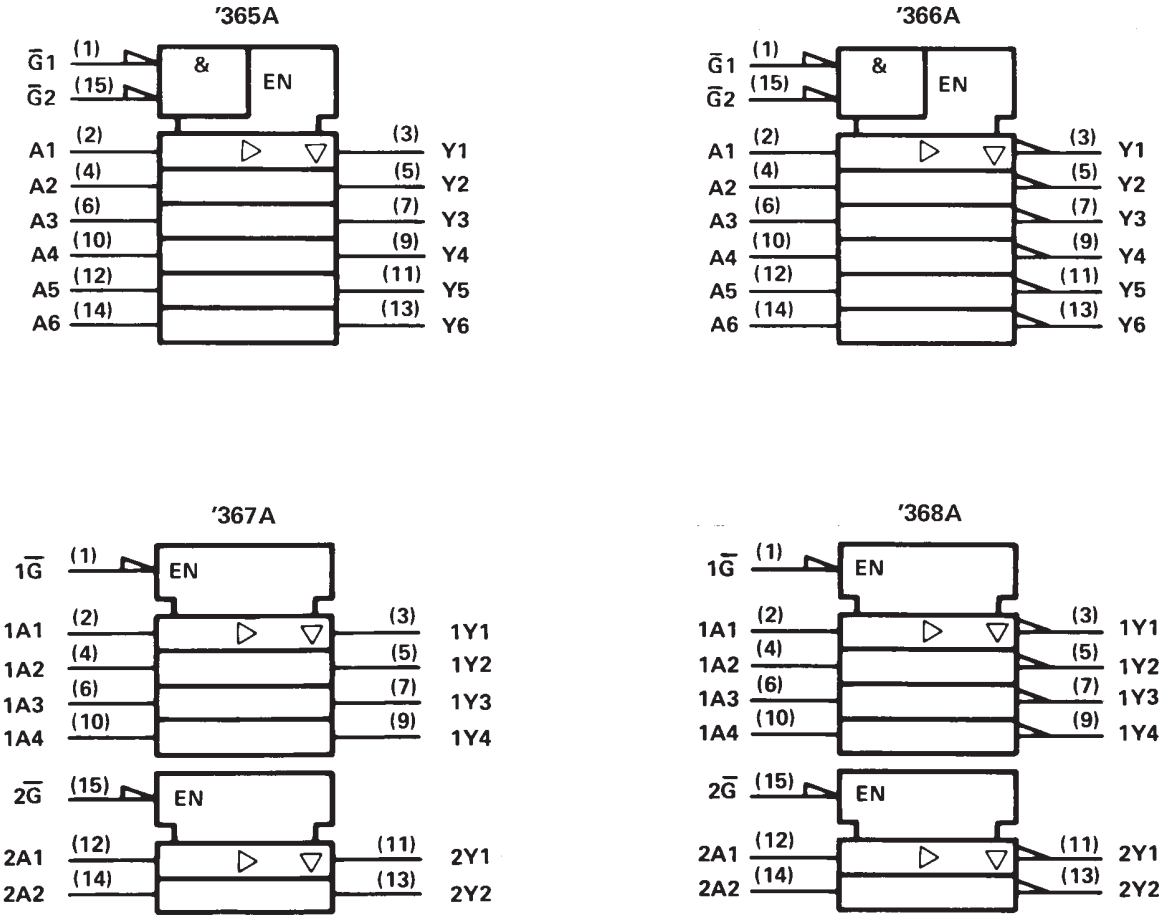

†These symbols are in accordance with ANSI/IEEE Std 91-1984 and IEC Publication 617-12.
Pin numbers shown are for D, J, and N packages.

absolute maximum ratings over operating free-air temperature range (unless otherwise noted)

Supply voltage, V_{CC} (see Note 1)	7 V
Input voltage: '365A, '366A, '367A, '368A	5.5 V
'LS365A, 'LS366A, 'LS367A, 'LS368A	7 V
Voltage applied to a disabled 3-state output	5.5 V
Operating free-air temperature: SN54'	−55°C to 125°C
SN74'	0°C to 70°C
Storage temperature range	−65°C to 150°C

NOTE 1: Voltage values are with respect to network ground terminal.

recommended operating conditions

		SN54365A SN54367A			SN74365A SN74367A			UNIT
		MIN	NOM	MAX	MIN	NOM	MAX	
V_{CC}	Supply voltage	4.5	5	5.5	4.75	5	5.25	V
V_{IH}	High-level input voltage	2			2			V
V_{IL}	Low-level input voltage			0.8			0.8	V
I_{OH}	High-level output current			−2			−5.2	mA
I_{OL}	Low-level output current			32			32	mA
T_A	Operating free-air temperature	−55		125	0		70	°C

electrical characteristics over recommended operating free-air temperature range (unless otherwise noted)

PARAMETER		TEST CONDITIONS†			SN54365A SN54367A			SN74365A SN74367A			UNIT
					MIN	TYP‡	MAX	MIN	TYP‡	MAX	
V_{IK}		V_{CC} = MIN,	I_I = −12 mA				−1.5			−1.5	V
V_{OH}		V_{CC} = MIN, I_{OH} = MAX	V_{IH} = 2 V,	V_{IL} = 0.8 V,	2.4	3.3		2.4	3.1		V
V_{OL}		V_{CC} = MIN, I_{OL} = 32 mA	V_{IH} = 2 V,	V_{IL} = 0.8 V,			0.4			0.4	V
I_{OZ}		V_{CC} = MAX, V_O = 2.4 V	V_{IH} = 2 V,	V_{IL} = 0.8 V,			40			40	μA
		V_{CC} = MAX, V_O = 0.4 V	V_{IH} = 2 V	V_{IL} = 0.8 V,			−40			−40	μA
I_I		V_{CC} = MAX,	V_I = 5.5 V				1			1	mA
I_{IH}		V_{CC} = MAX,	V_I = 2.4 V				40			40	μA
I_{IL}	A Inputs	V_{CC} = MAX,	V_I = 0.5 V,	Either $\overline{G}$ input at 2 V			−40			−40	μA
		V_{CC} = MAX,	V_I = 0.4 V,	Both $\overline{G}$ inputs at 0.4 V			−1.6			−1.6	mA
	$\overline{G}$ Inputs	V_{CC} = MAX,	V_I = 0.4 V				−1.6			−1.6	mA
I_{OS}§		V_{CC} = MAX			−40		−130	−40		−130	mA
I_{CC}		V_{CC} = MAX,	Data inputs = 0 V,	Output controls = 4.5 V		65	85		65	85	mA

† For conditions shown as MIN or MAX, use the appropriate value specified under recommended operating conditions.
‡ All typical values are at V_{CC} = 5 V, T_A = 25°C.
§ Not more than one output should be shorted at a time.

switching characteristics, V_{CC} = 5 V, T_A = 25°C (see note 2)

PARAMETER	FROM (INPUT)	TO (OUTPUT)	TEST CONDITIONS		MIN	TYP	MAX	UNIT
t_{PLH}	Any	Y	R_L = 400 Ω,	C_L = 50 pF			16	ns
t_{PHL}							22	ns
t_{PZH}							35	ns
t_{PZL}							37	ns
t_{PHZ}			R_L = 400 Ω,	C_L = 5 pF			11	ns
t_{PLZ}							27	ns

NOTE 2: Load circuits and voltage waveforms are shown in Section 1.

TEXAS INSTRUMENTS
POST OFFICE BOX 655012 • DALLAS, TEXAS 75265

recommended operating conditions

		SN54366A SN54368A			SN74366A SN74368A			UNIT
		MIN	NOM	MAX	MIN	NOM	MAX	
V_{CC}	Supply voltage	4.5	5	5.5	4.75	5	5.25	V
V_{IH}	High-level input voltage	2			2			V
V_{IL}	Low-level input voltage			0.8			0.8	V
I_{OH}	High-level output current			−2			−5.2	mA
I_{OL}	Low-level output current			32			32	mA
T_A	Operating free-air temperature	−55		125	0		70	°C

electrical characteristics over recommended operating free-air temperature range (unless otherwise noted)

PARAMETER		TEST CONDITIONS†			SN54366A SN54368A			SN74366A SN74368A			UNIT
					MIN	TYP‡	MAX	MIN	TYP‡	MAX	
V_{IK}		V_{CC} = MIN,	I_I = −12 mA				−1.5			−1.5	V
V_{OH}		V_{CC} = MIN, I_{OH} = MAX	V_{IH} = 2 V,	V_{IL} = 0.8 V,	2.4	3.3		2.4	3.1		V
V_{OL}		V_{CC} = MIN, I_{OL} = 32 mA	V_{IH} = 2 V,	V_{IL} = 0.8 V,			0.4			0.4	V
I_{OZ}		V_{CC} = MAX, V_O = 2.4 V	V_{IH} = 2 V,	V_{IL} = 0.8 V,			40			40	μA
		V_{CC} = MAX, V_O = 0.4 V	V_{IH} = 2 V	V_{IL} = 0.8 V,			−40			−40	
I_I		V_{CC} = MAX,	V_I = 5.5 V				1			1	mA
I_{IH}		V_{CC} = MAX,	V_I = 2.4 V				40			40	μA
I_{IL}	A Inputs	V_{CC} = MAX,	V_I = 0.5 V,	Either $\overline{G}$ input at 2 V			−40			−40	μA
		V_{CC} = MAX,	V_I = 0.4 V,	Both $\overline{G}$ inputs at 0.4 V			−1.6			−1.6	mA
	$\overline{G}$ Inputs	V_{CC} = MAX,	V_I = 0.4 V				−1.6			−1.6	
I_{OS}§		V_{CC} = MAX			−40		−130	−40		−130	mA
I_{CC}		V_{CC} = MAX,	Data inputs = 0 V,	Output controls = 4.5 V,		59	77		59	77	mA

† For conditions shown as MIN or MAX, use the appropriate value specified under recommended operating conditions.
‡ All typical values are at V_{CC} = 5 V, T_A = 25°C.
§ Not more than one output should be shorted at a time.

switching characteristics, V_{CC} = 5 V, T_A = 25°C (see note 2)

PARAMETER	FROM (INPUT)	TO (OUTPUT)	TEST CONDITIONS		MIN	TYP	MAX	UNIT
t_{PLH}	Any	Y	R_L = 400 Ω,	C_L = 50 pF			17	ns
t_{PHL}							16	ns
t_{PZH}							35	ns
t_{PZL}							37	ns
t_{PHZ}			R_L = 400 Ω,	C_L = 5 pF			11	ns
t_{PLZ}							27	ns

NOTE 2: Load circuits and voltage waveforms are shown in Section 1.

recommended operating conditions

		SN54LS365A SN54LS367A			SN74LS365A SN74LS367A			UNIT
		MIN	NOM	MAX	MIN	NOM	MAX	
V_{CC}	Supply voltage	4.5	5	5.5	4.75	5	5.25	V
V_{IH}	High-level input voltage	2			2			V
V_{IL}	Low-level input voltage			0.7			0.8	V
I_{OH}	High-level output current			−1			−2.6	mA
I_{OL}	Low-level output current			12			24	mA
T_A	Operating free-air temperature	−55		125	0		70	°C

electrical characteristics over recommended operating free-air temperature range (unless otherwise noted)

PARAMETER		TEST CONDITIONS†			SN54LS365A SN54LS367A			SN74LS365A SN74LS367A			UNIT
					MIN	TYP‡	MAX	MIN	TYP‡	MAX	
V_{IK}		V_{CC} = MIN,	I_I = −18 mA				−1.5			−1.5	V
V_{OH}		V_{CC} = MIN, I_{OH} = MAX	V_{IH} = 2 V,	V_{IL} = MAX,	2.4	3.3		2.4	3.1		V
V_{OL}		V_{CC} = MIN, I_{OL} = 12 mA	V_{IH} = 2 V,	V_{IL} = MAX,		0.25	0.4		0.25	0.4	V
		V_{CC} = MIN, I_{OL} = 24 mA	V_{IH} = 2 V,	V_{IL} = 0.8 V,					0.35	0.5	
I_{OZ}		V_{CC} = MAX, V_O = 2.4 V	V_{IH} = 2 V,	V_{IL} = MAX,			20			20	μA
		V_{CC} = MAX, V_O = 0.4 V	V_{IH} = 2 V,	V_{IL} = MAX,			−20			−20	
I_I		V_{CC} = MAX,	V_I = 7 V				0.1			0.1	mA
I_{IH}		V_{CC} = MAX,	V_I = 2.7 V				20			20	μA
I_{IL}	A Inputs	V_{CC} = MAX,	V_I = 0.5 V,	Either $\overline{G}$ input at 2 V			−20			−20	μA
		V_{CC} = MAX,	V_I = 0.4 V,	Both $\overline{G}$ inputs at 0.4 V			−0.4			−0.4	mA
	$\overline{G}$ Inputs	V_{CC} = MAX,	V_I = 0.4 V				−0.2			−0.2	
I_{OS}§		V_{CC} = MAX			−40		−225	−40		−225	mA
I_{CC}		V_{CC} = MAX,	Data inputs = 0 V,	Output controls = 4.5 V,		14	24		14	24	mA

† For conditions shown as MIN or MAX, use the appropriate value specified under recommended operating conditions.
‡ All typical values are at V_{CC} = 5 V, T_A = 25°C.
§ Not more than one output should be shorted at a time, and the duration of the short circuit should not exceed one second.

switching characteristics, V_{CC} = 5 V, T_A = 25°C (see note 2)

PARAMETER	FROM (INPUT)	TO (OUTPUT)	TEST CONDITIONS	MIN	TYP	MAX	UNIT
t_{PLH}	Any	Y	R_L = 667 Ω, C_L = 45 pF		10	16	ns
t_{PHL}					9	22	ns
t_{PZH}					19	35	ns
t_{PZL}					24	40	ns
t_{PHZ}			R_L = 667 Ω, C_L = 5 pF			30	ns
t_{PLZ}						35	ns

NOTE 2: Load circuits and voltage waveforms are shown in Section 1.

recommended operating conditions

		SN54LS366A SN54LS368A			SN74LS366A SN74LS368A			UNIT
		MIN	NOM	MAX	MIN	NOM	MAX	
V_{CC}	Supply voltage	4.5	5	5.5	4.75	5	5.25	V
V_{IH}	High-level input voltage	2			2			V
V_{IL}	Low-level input voltage			0.7			0.8	V
I_{OH}	High-level output current			–1			– 2.6	mA
I_{OL}	Low-level output current			12			24	mA
T_A	Operating free-air temperature	– 55		125	0		70	°C

electrical characteristics over recommended operating free-air temperature range (unless otherwise noted)

PARAMETER		TEST CONDITIONS†			SN54LS366A SN54LS368A			SN74LS366A SN74LS368A			UNIT
					MIN	TYP‡	MAX	MIN	TYP‡	MAX	
V_{IK}		V_{CC} = MIN,	I_I = – 18 mA				– 1.5			– 1.5	V
V_{OH}		V_{CC} = MIN, I_{OH} = MAX	V_{IH} = 2 V,	V_{IL} = MAX,	2.4	3.3		2.4	3.1		V
V_{OL}		V_{CC} = MIN, I_{OL} = 12 mA	V_{IH} = 2 V,	V_{IL} = MAX,		0.25	0.4		0.25	0.4	V
		V_{CC} = MIN, I_{OL} = 24 mA	V_{IH} = 2 V,	V_{IL} = 0.8 V,					0.35	0.5	
I_{OZ}		V_{CC} = MAX, V_O = 2.4 V	V_{IH} = 2 V,	V_{IL} = MAX,			20			20	μA
		V_{CC} = MAX, V_O = 0.4 V	V_{IH} = 2 V,	V_{IL} = MAX,			– 20			– 20	
I_I		V_{CC} = MAX,	V_I = 7 V				0.1			0.1	mA
I_{IH}		V_{CC} = MAX,	V_I = 2.7 V				20			20	μA
I_{IL}	A Inputs	V_{CC} = MAX,	V_I = 0.5 V,	Either $\overline{G}$ input at 2 V			– 20			– 20	uA
		V_{CC} = MAX,	V_I = 0.4 V,	Both $\overline{G}$ inputs at 0.4 V			– 0.4			– 0.4	mA
	$\overline{G}$ Inputs	V_{CC} = MAX,	V_I = 0.4 V				– 0.2			– 0.2	
I_{OS}§		V_{CC} = MAX			– 40		– 225	– 40		– 225	mA
I_{CC}		V_{CC} = MAX,	Data inputs = 0 V,	Output controls = 4.5 V,		12	21		12	21	mA

† For conditions shown as MIN or MAX, use the appropriate value specified under recommended operating conditions.
‡ All typical values are at V_{CC} = 5 V, T_A = 25°C.
§ Not more than one output should be shorted at a time, and the duration of the short circuit should not exceed one second.

switching characteristics, V_{CC} = 5 V, T_A = 25°C (see note 2)

PARAMETER	FROM (INPUT)	TO (OUTPUT)	TEST CONDITIONS	MIN	TYP	MAX	UNIT
t_{PLH}	Any	Y	R_L = 667 Ω, C_L = 45 pF		7	15	ns
t_{PHL}					12	18	ns
t_{PZH}					18	35	ns
t_{PZL}					28	45	ns
t_{PHZ}			R_L = 667 Ω, C_L = 5 pF			32	ns
t_{PLZ}						35	ns

NOTE 2: Load circuits and voltage waveforms are shown in Section 1.

PACKAGING INFORMATION

Orderable Device	Status (1)	Package Type	Package Drawing	Pins	Package Qty	Eco Plan (2)	Lead/Ball Finish	MSL Peak Temp (3)
5962-9687802QEA	ACTIVE	CDIP	J	16	1	TBD	Call TI	Level-NC-NC-NC
5962-9687802QFA	ACTIVE	CFP	W	16	1	TBD	Call TI	Level-NC-NC-NC
5962-9687802QFA	ACTIVE	CFP	W	16	1	TBD	Call TI	Level-NC-NC-NC
JM38510/16303BEA	OBSOLETE	CDIP	J	16		TBD	Call TI	Call TI
JM38510/16303BEA	OBSOLETE	CDIP	J	16		TBD	Call TI	Call TI
JM38510/16304BEA	OBSOLETE	CDIP	J	16		TBD	Call TI	Call TI
JM38510/16304BEA	OBSOLETE	CDIP	J	16		TBD	Call TI	Call TI
JM38510/32201B2A	ACTIVE	LCCC	FK	20	1	TBD	Call TI	Level-NC-NC-NC
JM38510/32201B2A	ACTIVE	LCCC	FK	20	1	TBD	Call TI	Level-NC-NC-NC
JM38510/32201BEA	ACTIVE	CDIP	J	16	1	TBD	Call TI	Level-NC-NC-NC
JM38510/32201BEA	ACTIVE	CDIP	J	16	1	TBD	Call TI	Level-NC-NC-NC
JM38510/32201BFA	ACTIVE	CFP	W	16	1	TBD	Call TI	Level-NC-NC-NC
JM38510/32201BFA	ACTIVE	CFP	W	16	1	TBD	Call TI	Level-NC-NC-NC
JM38510/32203B2A	ACTIVE	LCCC	FK	20	1	TBD	Call TI	Level-NC-NC-NC
JM38510/32203B2A	ACTIVE	LCCC	FK	20	1	TBD	Call TI	Level-NC-NC-NC
JM38510/32203BEA	ACTIVE	CDIP	J	16	1	TBD	Call TI	Level-NC-NC-NC
JM38510/32203BEA	ACTIVE	CDIP	J	16	1	TBD	Call TI	Level-NC-NC-NC
JM38510/32203BFA	ACTIVE	CFP	W	16	1	TBD	Call TI	Level-NC-NC-NC
JM38510/32203BFA	ACTIVE	CFP	W	16	1	TBD	Call TI	Level-NC-NC-NC
JM38510/32203SEA	ACTIVE	CDIP	J	16	1	TBD	Call TI	Level-NC-NC-NC
JM38510/32203SEA	ACTIVE	CDIP	J	16	1	TBD	Call TI	Level-NC-NC-NC
JM38510/32203SFA	ACTIVE	CFP	W	16	1	TBD	Call TI	Level-NC-NC-NC
JM38510/32203SFA	ACTIVE	CFP	W	16	1	TBD	Call TI	Level-NC-NC-NC
SN54365AJ	OBSOLETE	CDIP	J	16		TBD	Call TI	Call TI
SN54365AJ	OBSOLETE	CDIP	J	16		TBD	Call TI	Call TI
SN54366AJ	ACTIVE	CDIP	J	16	1	TBD	Call TI	Level-NC-NC-NC
SN54366AJ	ACTIVE	CDIP	J	16	1	TBD	Call TI	Level-NC-NC-NC
SN54367AJ	OBSOLETE	CDIP	J	16		TBD	Call TI	Call TI
SN54367AJ	OBSOLETE	CDIP	J	16		TBD	Call TI	Call TI
SN54368AJ	OBSOLETE	CDIP	J	16		TBD	Call TI	Call TI
SN54368AJ	OBSOLETE	CDIP	J	16		TBD	Call TI	Call TI
SN54LS365AJ	ACTIVE	CDIP	J	16	1	TBD	Call TI	Level-NC-NC-NC
SN54LS365AJ	ACTIVE	CDIP	J	16	1	TBD	Call TI	Level-NC-NC-NC
SN54LS366AJ	ACTIVE	CDIP	J	16	1	TBD	Call TI	Level-NC-NC-NC
SN54LS366AJ	ACTIVE	CDIP	J	16	1	TBD	Call TI	Level-NC-NC-NC
SN54LS367AJ	ACTIVE	CDIP	J	16	1	TBD	Call TI	Level-NC-NC-NC
SN54LS367AJ	ACTIVE	CDIP	J	16	1	TBD	Call TI	Level-NC-NC-NC
SN54LS368AJ	ACTIVE	CDIP	J	16	1	TBD	Call TI	Level-NC-NC-NC
SN54LS368AJ	ACTIVE	CDIP	J	16	1	TBD	Call TI	Level-NC-NC-NC
SN74365AN	OBSOLETE	PDIP	N	16		TBD	Call TI	Call TI
SN74365AN	OBSOLETE	PDIP	N	16		TBD	Call TI	Call TI
SN74366AN	OBSOLETE	PDIP	N	16		TBD	Call TI	Call TI

Orderable Device	Status (1)	Package Type	Package Drawing	Pins	Package Qty	Eco Plan (2)	Lead/Ball Finish	MSL Peak Temp (3)
SN74366AN	OBSOLETE	PDIP	N	16		TBD	Call TI	Call TI
SN74367AN	OBSOLETE	PDIP	N	16		TBD	Call TI	Call TI
SN74367AN	OBSOLETE	PDIP	N	16		TBD	Call TI	Call TI
SN74367AN3	OBSOLETE	PDIP	N	16		TBD	Call TI	Call TI
SN74367AN3	OBSOLETE	PDIP	N	16		TBD	Call TI	Call TI
SN74368AN	OBSOLETE	PDIP	N	16		TBD	Call TI	Call TI
SN74368AN	OBSOLETE	PDIP	N	16		TBD	Call TI	Call TI
SN74368AN3	OBSOLETE	PDIP	N	16		TBD	Call TI	Call TI
SN74368AN3	OBSOLETE	PDIP	N	16		TBD	Call TI	Call TI
SN74LS365AD	ACTIVE	SOIC	D	16	40	Green (RoHS & no Sb/Br)	CU NIPDAU	Level-1-260C-UNLIM
SN74LS365AD	ACTIVE	SOIC	D	16	40	Green (RoHS & no Sb/Br)	CU NIPDAU	Level-1-260C-UNLIM
SN74LS365ADE4	ACTIVE	SOIC	D	16	40	Green (RoHS & no Sb/Br)	CU NIPDAU	Level-1-260C-UNLIM
SN74LS365ADE4	ACTIVE	SOIC	D	16	40	Green (RoHS & no Sb/Br)	CU NIPDAU	Level-1-260C-UNLIM
SN74LS365ADR	ACTIVE	SOIC	D	16	2500	Green (RoHS & no Sb/Br)	CU NIPDAU	Level-1-260C-UNLIM
SN74LS365ADR	ACTIVE	SOIC	D	16	2500	Green (RoHS & no Sb/Br)	CU NIPDAU	Level-1-260C-UNLIM
SN74LS365ADRE4	ACTIVE	SOIC	D	16	2500	Green (RoHS & no Sb/Br)	CU NIPDAU	Level-1-260C-UNLIM
SN74LS365ADRE4	ACTIVE	SOIC	D	16	2500	Green (RoHS & no Sb/Br)	CU NIPDAU	Level-1-260C-UNLIM
SN74LS365AN	ACTIVE	PDIP	N	16	25	Pb-Free (RoHS)	CU NIPDAU	Level-NC-NC-NC
SN74LS365AN	ACTIVE	PDIP	N	16	25	Pb-Free (RoHS)	CU NIPDAU	Level-NC-NC-NC
SN74LS365AN3	OBSOLETE	PDIP	N	16		TBD	Call TI	Call TI
SN74LS365AN3	OBSOLETE	PDIP	N	16		TBD	Call TI	Call TI
SN74LS365ANE4	ACTIVE	PDIP	N	16	25	Pb-Free (RoHS)	CU NIPDAU	Level-NC-NC-NC
SN74LS365ANE4	ACTIVE	PDIP	N	16	25	Pb-Free (RoHS)	CU NIPDAU	Level-NC-NC-NC
SN74LS365ANSR	ACTIVE	SO	NS	16	2000	Green (RoHS & no Sb/Br)	CU NIPDAU	Level-1-260C-UNLIM
SN74LS365ANSR	ACTIVE	SO	NS	16	2000	Green (RoHS & no Sb/Br)	CU NIPDAU	Level-1-260C-UNLIM
SN74LS365ANSRE4	ACTIVE	SO	NS	16	2000	Green (RoHS & no Sb/Br)	CU NIPDAU	Level-1-260C-UNLIM
SN74LS365ANSRE4	ACTIVE	SO	NS	16	2000	Green (RoHS & no Sb/Br)	CU NIPDAU	Level-1-260C-UNLIM
SN74LS366AD	OBSOLETE	SOIC	D	16		TBD	Call TI	Call TI
SN74LS366AD	OBSOLETE	SOIC	D	16		TBD	Call TI	Call TI
SN74LS366ADR	OBSOLETE	SOIC	D	16		TBD	Call TI	Call TI
SN74LS366ADR	OBSOLETE	SOIC	D	16		TBD	Call TI	Call TI
SN74LS366AN	OBSOLETE	PDIP	N	16		TBD	Call TI	Call TI

Orderable Device	Status (1)	Package Type	Package Drawing	Pins	Package Qty	Eco Plan (2)	Lead/Ball Finish	MSL Peak Temp (3)
SN74LS366AN	OBSOLETE	PDIP	N	16		TBD	Call TI	Call TI
SN74LS367AD	ACTIVE	SOIC	D	16	40	Green (RoHS & no Sb/Br)	CU NIPDAU	Level-1-260C-UNLIM
SN74LS367AD	ACTIVE	SOIC	D	16	40	Green (RoHS & no Sb/Br)	CU NIPDAU	Level-1-260C-UNLIM
SN74LS367ADE4	ACTIVE	SOIC	D	16	40	Green (RoHS & no Sb/Br)	CU NIPDAU	Level-1-260C-UNLIM
SN74LS367ADE4	ACTIVE	SOIC	D	16	40	Green (RoHS & no Sb/Br)	CU NIPDAU	Level-1-260C-UNLIM
SN74LS367ADR	ACTIVE	SOIC	D	16	2500	Green (RoHS & no Sb/Br)	CU NIPDAU	Level-1-260C-UNLIM
SN74LS367ADR	ACTIVE	SOIC	D	16	2500	Green (RoHS & no Sb/Br)	CU NIPDAU	Level-1-260C-UNLIM
SN74LS367ADRE4	ACTIVE	SOIC	D	16	2500	Green (RoHS & no Sb/Br)	CU NIPDAU	Level-1-260C-UNLIM
SN74LS367ADRE4	ACTIVE	SOIC	D	16	2500	Green (RoHS & no Sb/Br)	CU NIPDAU	Level-1-260C-UNLIM
SN74LS367AJ	OBSOLETE	CDIP	J	16		TBD	Call TI	Call TI
SN74LS367AJ	OBSOLETE	CDIP	J	16		TBD	Call TI	Call TI
SN74LS367AN	ACTIVE	PDIP	N	16	25	Pb-Free (RoHS)	CU NIPDAU	Level-NC-NC-NC
SN74LS367AN	ACTIVE	PDIP	N	16	25	Pb-Free (RoHS)	CU NIPDAU	Level-NC-NC-NC
SN74LS367AN3	OBSOLETE	PDIP	N	16		TBD	Call TI	Call TI
SN74LS367AN3	OBSOLETE	PDIP	N	16		TBD	Call TI	Call TI
SN74LS367ANE4	ACTIVE	PDIP	N	16	25	Pb-Free (RoHS)	CU NIPDAU	Level-NC-NC-NC
SN74LS367ANE4	ACTIVE	PDIP	N	16	25	Pb-Free (RoHS)	CU NIPDAU	Level-NC-NC-NC
SN74LS367ANSR	ACTIVE	SO	NS	16	2000	Green (RoHS & no Sb/Br)	CU NIPDAU	Level-1-260C-UNLIM
SN74LS367ANSR	ACTIVE	SO	NS	16	2000	Green (RoHS & no Sb/Br)	CU NIPDAU	Level-1-260C-UNLIM
SN74LS367ANSRG4	ACTIVE	SO	NS	16	2000	Green (RoHS & no Sb/Br)	CU NIPDAU	Level-1-260C-UNLIM
SN74LS367ANSRG4	ACTIVE	SO	NS	16	2000	Green (RoHS & no Sb/Br)	CU NIPDAU	Level-1-260C-UNLIM
SN74LS368AD	ACTIVE	SOIC	D	16	40	Green (RoHS & no Sb/Br)	CU NIPDAU	Level-1-260C-UNLIM
SN74LS368AD	ACTIVE	SOIC	D	16	40	Green (RoHS & no Sb/Br)	CU NIPDAU	Level-1-260C-UNLIM
SN74LS368ADE4	ACTIVE	SOIC	D	16	40	Green (RoHS & no Sb/Br)	CU NIPDAU	Level-1-260C-UNLIM
SN74LS368ADE4	ACTIVE	SOIC	D	16	40	Green (RoHS & no Sb/Br)	CU NIPDAU	Level-1-260C-UNLIM
SN74LS368ADR	ACTIVE	SOIC	D	16	2500	Green (RoHS & no Sb/Br)	CU NIPDAU	Level-1-260C-UNLIM
SN74LS368ADR	ACTIVE	SOIC	D	16	2500	Green (RoHS & no Sb/Br)	CU NIPDAU	Level-1-260C-UNLIM
SN74LS368ADRE4	ACTIVE	SOIC	D	16	2500	Green (RoHS & no Sb/Br)	CU NIPDAU	Level-1-260C-UNLIM

Orderable Device	Status (1)	Package Type	Package Drawing	Pins	Package Qty	Eco Plan (2)	Lead/Ball Finish	MSL Peak Temp (3)
SN74LS368ADRE4	ACTIVE	SOIC	D	16	2500	Green (RoHS & no Sb/Br)	CU NIPDAU	Level-1-260C-UNLIM
SN74LS368AJ	OBSOLETE	CDIP	J	16		TBD	Call TI	Call TI
SN74LS368AJ	OBSOLETE	CDIP	J	16		TBD	Call TI	Call TI
SN74LS368AN	ACTIVE	PDIP	N	16	25	Pb-Free (RoHS)	CU NIPDAU	Level-NC-NC-NC
SN74LS368AN	ACTIVE	PDIP	N	16	25	Pb-Free (RoHS)	CU NIPDAU	Level-NC-NC-NC
SN74LS368AN3	OBSOLETE	PDIP	N	16		TBD	Call TI	Call TI
SN74LS368AN3	OBSOLETE	PDIP	N	16		TBD	Call TI	Call TI
SN74LS368ANE4	ACTIVE	PDIP	N	16	25	Pb-Free (RoHS)	CU NIPDAU	Level-NC-NC-NC
SN74LS368ANE4	ACTIVE	PDIP	N	16	25	Pb-Free (RoHS)	CU NIPDAU	Level-NC-NC-NC
SN74LS368ANSR	ACTIVE	SO	NS	16	2000	Green (RoHS & no Sb/Br)	CU NIPDAU	Level-1-260C-UNLIM
SN74LS368ANSR	ACTIVE	SO	NS	16	2000	Green (RoHS & no Sb/Br)	CU NIPDAU	Level-1-260C-UNLIM
SN74LS368ANSRE4	ACTIVE	SO	NS	16	2000	Green (RoHS & no Sb/Br)	CU NIPDAU	Level-1-260C-UNLIM
SN74LS368ANSRE4	ACTIVE	SO	NS	16	2000	Green (RoHS & no Sb/Br)	CU NIPDAU	Level-1-260C-UNLIM
SNJ54365AJ	OBSOLETE	CDIP	J	16		TBD	Call TI	Call TI
SNJ54365AJ	OBSOLETE	CDIP	J	16		TBD	Call TI	Call TI
SNJ54366AJ	ACTIVE	CDIP	J	16	1	TBD	Call TI	Level-NC-NC-NC
SNJ54366AJ	ACTIVE	CDIP	J	16	1	TBD	Call TI	Level-NC-NC-NC
SNJ54366AW	ACTIVE	CFP	W	16	1	TBD	Call TI	Level-NC-NC-NC
SNJ54366AW	ACTIVE	CFP	W	16	1	TBD	Call TI	Level-NC-NC-NC
SNJ54367AJ	OBSOLETE	CDIP	J	16		TBD	Call TI	Call TI
SNJ54367AJ	OBSOLETE	CDIP	J	16		TBD	Call TI	Call TI
SNJ54367AW	OBSOLETE	CFP	W	16		TBD	Call TI	Call TI
SNJ54367AW	OBSOLETE	CFP	W	16		TBD	Call TI	Call TI
SNJ54368AJ	OBSOLETE	CDIP	J	16		TBD	Call TI	Call TI
SNJ54368AJ	OBSOLETE	CDIP	J	16		TBD	Call TI	Call TI
SNJ54368AW	OBSOLETE	CFP	W	16		TBD	Call TI	Call TI
SNJ54368AW	OBSOLETE	CFP	W	16		TBD	Call TI	Call TI
SNJ54LS365AFK	ACTIVE	LCCC	FK	20	1	TBD	Call TI	Level-NC-NC-NC
SNJ54LS365AFK	ACTIVE	LCCC	FK	20	1	TBD	Call TI	Level-NC-NC-NC
SNJ54LS365AJ	ACTIVE	CDIP	J	16	1	TBD	Call TI	Level-NC-NC-NC
SNJ54LS365AJ	ACTIVE	CDIP	J	16	1	TBD	Call TI	Level-NC-NC-NC
SNJ54LS365AW	ACTIVE	CFP	W	16	1	TBD	Call TI	Level-NC-NC-NC
SNJ54LS365AW	ACTIVE	CFP	W	16	1	TBD	Call TI	Level-NC-NC-NC
SNJ54LS366AFK	ACTIVE	LCCC	FK	20	1	TBD	Call TI	Level-NC-NC-NC
SNJ54LS366AFK	ACTIVE	LCCC	FK	20	1	TBD	Call TI	Level-NC-NC-NC
SNJ54LS366AJ	ACTIVE	CDIP	J	16	1	TBD	Call TI	Level-NC-NC-NC
SNJ54LS366AJ	ACTIVE	CDIP	J	16	1	TBD	Call TI	Level-NC-NC-NC

Orderable Device	Status [1]	Package Type	Package Drawing	Pins	Package Qty	Eco Plan [2]	Lead/Ball Finish	MSL Peak Temp [3]
SNJ54LS366AW	ACTIVE	CFP	W	16	1	TBD	Call TI	Level-NC-NC-NC
SNJ54LS366AW	ACTIVE	CFP	W	16	1	TBD	Call TI	Level-NC-NC-NC
SNJ54LS367AFK	ACTIVE	LCCC	FK	20	1	TBD	Call TI	Level-NC-NC-NC
SNJ54LS367AFK	ACTIVE	LCCC	FK	20	1	TBD	Call TI	Level-NC-NC-NC
SNJ54LS367AJ	ACTIVE	CDIP	J	16	1	TBD	Call TI	Level-NC-NC-NC
SNJ54LS367AJ	ACTIVE	CDIP	J	16	1	TBD	Call TI	Level-NC-NC-NC
SNJ54LS367AW	ACTIVE	CFP	W	16	1	TBD	Call TI	Level-NC-NC-NC
SNJ54LS367AW	ACTIVE	CFP	W	16	1	TBD	Call TI	Level-NC-NC-NC
SNJ54LS368AFK	ACTIVE	LCCC	FK	20	1	TBD	Call TI	Level-NC-NC-NC
SNJ54LS368AFK	ACTIVE	LCCC	FK	20	1	TBD	Call TI	Level-NC-NC-NC
SNJ54LS368AJ	ACTIVE	CDIP	J	16	1	TBD	Call TI	Level-NC-NC-NC
SNJ54LS368AJ	ACTIVE	CDIP	J	16	1	TBD	Call TI	Level-NC-NC-NC
SNJ54LS368AW	ACTIVE	CFP	W	16	1	TBD	Call TI	Level-NC-NC-NC
SNJ54LS368AW	ACTIVE	CFP	W	16	1	TBD	Call TI	Level-NC-NC-NC

[1] The marketing status values are defined as follows:
ACTIVE: Product device recommended for new designs.
LIFEBUY: TI has announced that the device will be discontinued, and a lifetime-buy period is in effect.
NRND: Not recommended for new designs. Device is in production to support existing customers, but TI does not recommend using this part in a new design.
PREVIEW: Device has been announced but is not in production. Samples may or may not be available.
OBSOLETE: TI has discontinued the production of the device.

[2] Eco Plan - The planned eco-friendly classification: Pb-Free (RoHS) or Green (RoHS & no Sb/Br) - please check http://www.ti.com/productcontent for the latest availability information and additional product content details.
TBD: The Pb-Free/Green conversion plan has not been defined.
Pb-Free (RoHS): TI's terms "Lead-Free" or "Pb-Free" mean semiconductor products that are compatible with the current RoHS requirements for all 6 substances, including the requirement that lead not exceed 0.1% by weight in homogeneous materials. Where designed to be soldered at high temperatures, TI Pb-Free products are suitable for use in specified lead-free processes.
Green (RoHS & no Sb/Br): TI defines "Green" to mean Pb-Free (RoHS compatible), and free of Bromine (Br) and Antimony (Sb) based flame retardants (Br or Sb do not exceed 0.1% by weight in homogeneous material)

[3] MSL, Peak Temp. -- The Moisture Sensitivity Level rating according to the JEDEC industry standard classifications, and peak solder temperature.

Important Information and Disclaimer: The information provided on this page represents TI's knowledge and belief as of the date that it is provided. TI bases its knowledge and belief on information provided by third parties, and makes no representation or warranty as to the accuracy of such information. Efforts are underway to better integrate information from third parties. TI has taken and continues to take reasonable steps to provide representative and accurate information but may not have conducted destructive testing or chemical analysis on incoming materials and chemicals. TI and TI suppliers consider certain information to be proprietary, and thus CAS numbers and other limited information may not be available for release.

In no event shall TI's liability arising out of such information exceed the total purchase price of the TI part(s) at issue in this document sold by TI to Customer on an annual basis.

J (R–GDIP–T**) CERAMIC DUAL IN–LINE PACKAGE

14 LEADS SHOWN

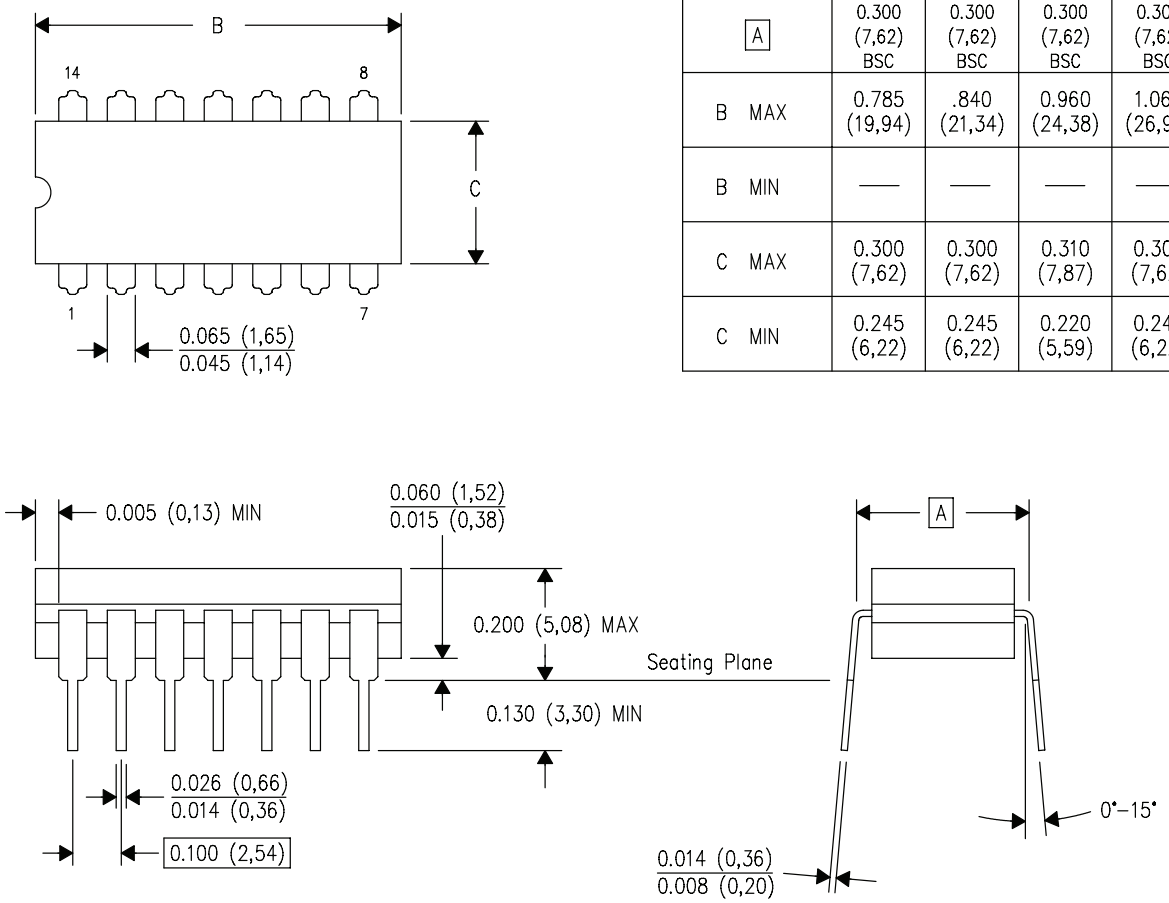

DIM \ PINS **	14	16	18	20
A	0.300 (7,62) BSC	0.300 (7,62) BSC	0.300 (7,62) BSC	0.300 (7,62) BSC
B MAX	0.785 (19,94)	.840 (21,34)	0.960 (24,38)	1.060 (26,92)
B MIN	—	—	—	—
C MAX	0.300 (7,62)	0.300 (7,62)	0.310 (7,87)	0.300 (7,62)
C MIN	0.245 (6,22)	0.245 (6,22)	0.220 (5,59)	0.245 (6,22)

4040083/F 03/03

NOTES:
A. All linear dimensions are in inches (millimeters).
B. This drawing is subject to change without notice.
C. This package is hermetically sealed with a ceramic lid using glass frit.
D. Index point is provided on cap for terminal identification only on press ceramic glass frit seal only.
E. Falls within MIL STD 1835 GDIP1–T14, GDIP1–T16, GDIP1–T18 and GDIP1–T20.

W (R–GDFP–F16) CERAMIC DUAL FLATPACK

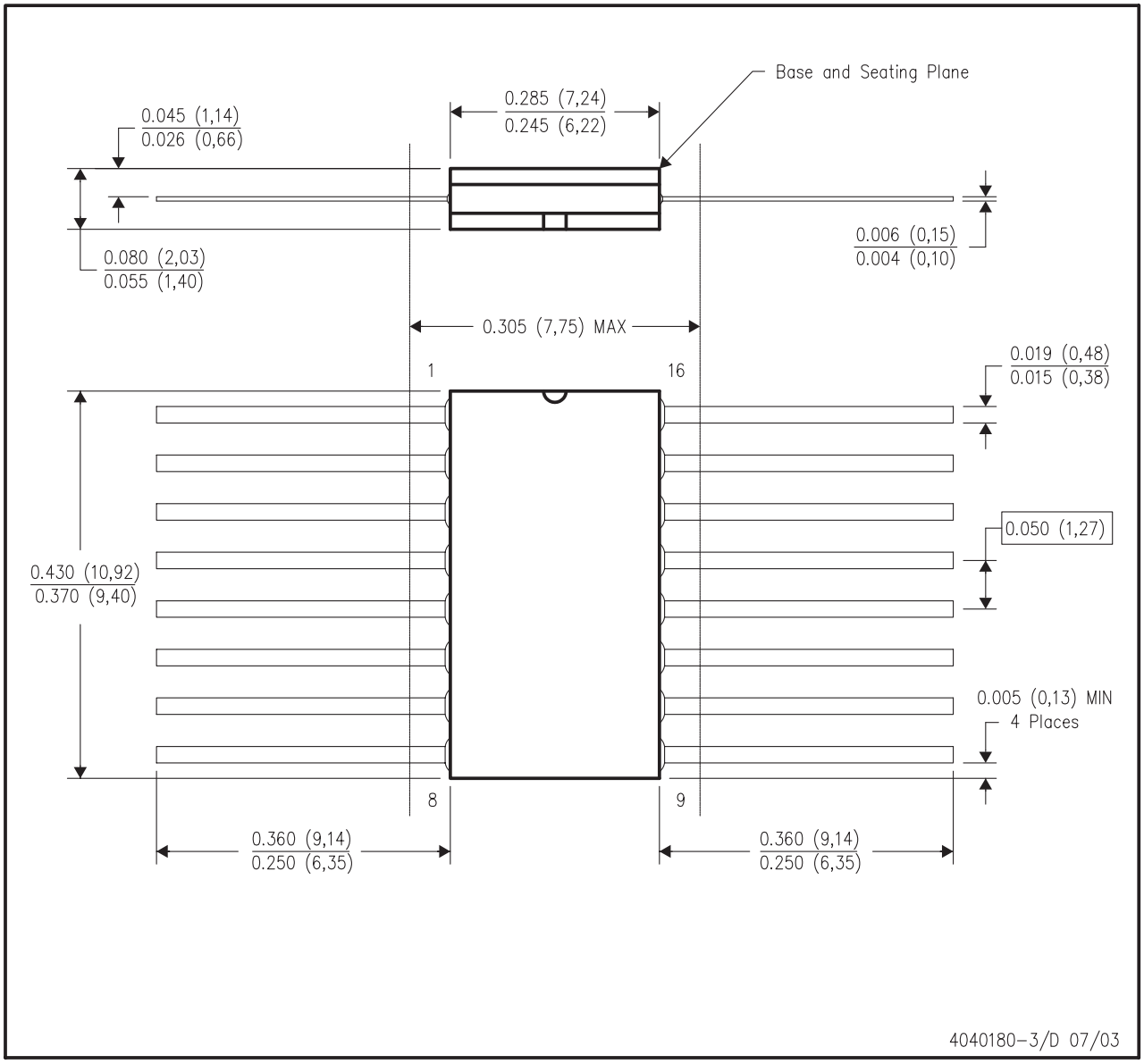

NOTES:
A. All linear dimensions are in inches (millimeters).
B. This drawing is subject to change without notice.
C. This package can be hermetically sealed with a ceramic lid using glass frit.
D. Index point is provided on cap for terminal identification only.
E. Falls within MIL STD 1835 GDFP1–F16 and JEDEC MO–092AC

FK (S-CQCC-N**) LEADLESS CERAMIC CHIP CARRIER

28 TERMINAL SHOWN

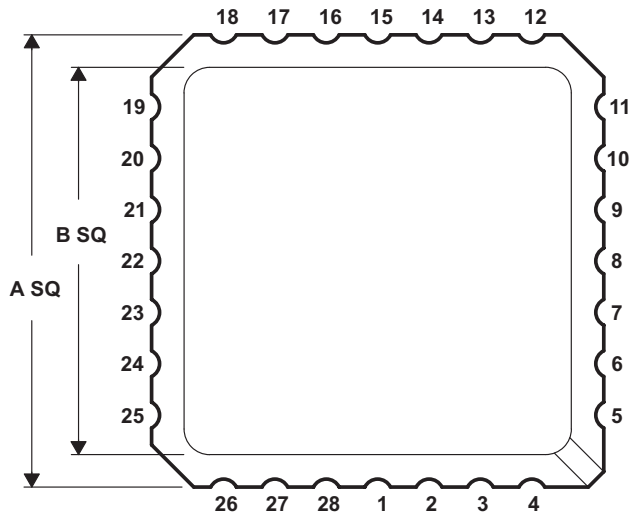

NO. OF TERMINALS **	A		B	
	MIN	MAX	MIN	MAX
20	0.342 (8,69)	0.358 (9,09)	0.307 (7,80)	0.358 (9,09)
28	0.442 (11,23)	0.458 (11,63)	0.406 (10,31)	0.458 (11,63)
44	0.640 (16,26)	0.660 (16,76)	0.495 (12,58)	0.560 (14,22)
52	0.739 (18,78)	0.761 (19,32)	0.495 (12,58)	0.560 (14,22)
68	0.938 (23,83)	0.962 (24,43)	0.850 (21,6)	0.858 (21,8)
84	1.141 (28,99)	1.165 (29,59)	1.047 (26,6)	1.063 (27,0)

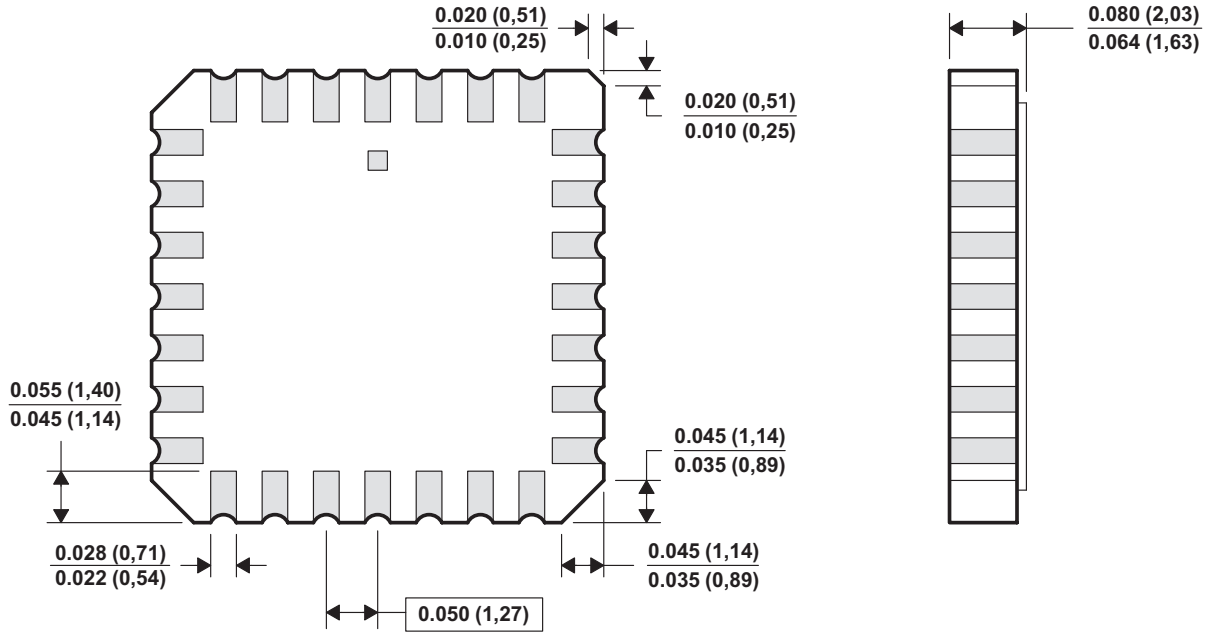

4040140/D 10/96

NOTES:
A. All linear dimensions are in inches (millimeters).
B. This drawing is subject to change without notice.
C. This package can be hermetically sealed with a metal lid.
D. The terminals are gold plated.
E. Falls within JEDEC MS-004

N (R–PDIP–T**) PLASTIC DUAL–IN–LINE PACKAGE

16 PINS SHOWN

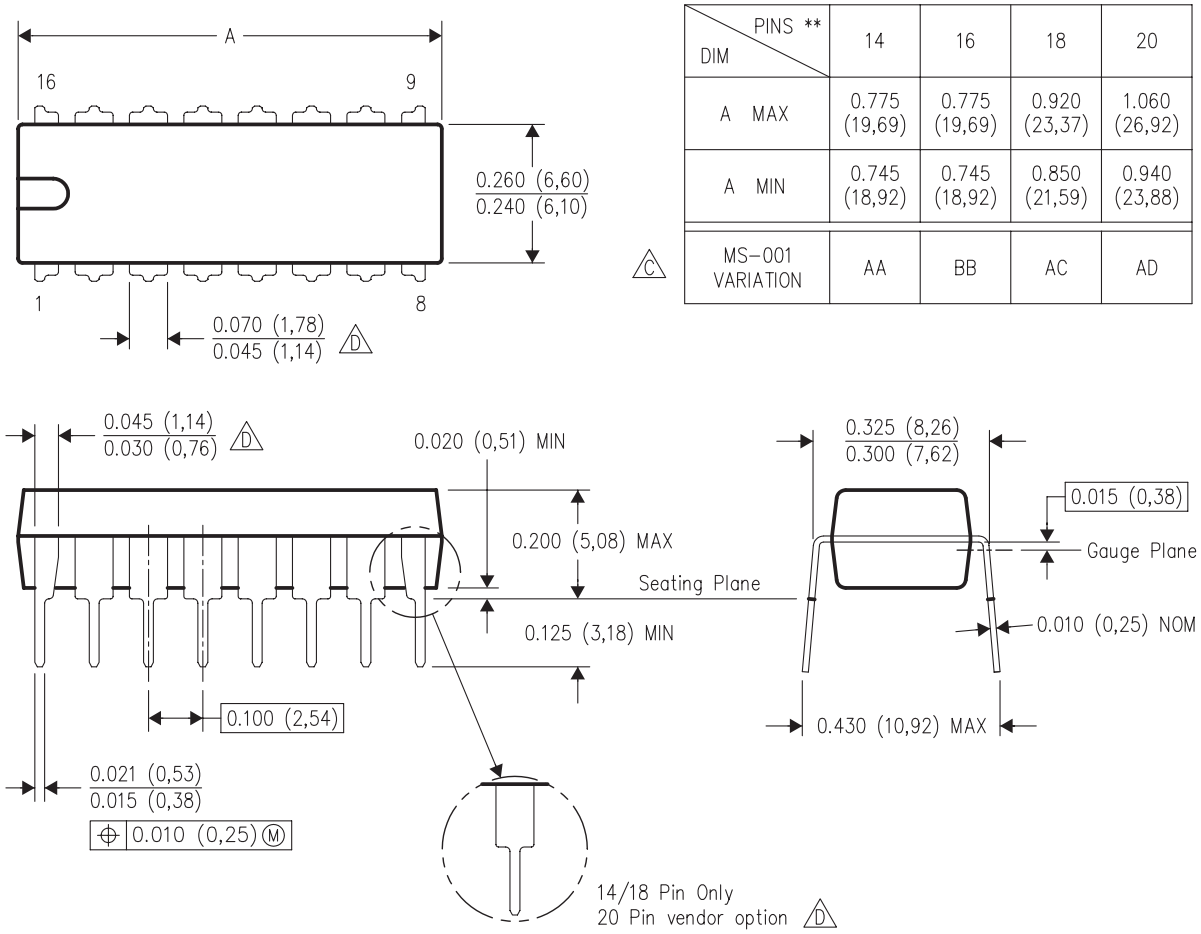

DIM \ PINS **	14	16	18	20
A MAX	0.775 (19,69)	0.775 (19,69)	0.920 (23,37)	1.060 (26,92)
A MIN	0.745 (18,92)	0.745 (18,92)	0.850 (21,59)	0.940 (23,88)
MS–001 VARIATION	AA	BB	AC	AD

C

NOTES:
A. All linear dimensions are in inches (millimeters).
B. This drawing is subject to change without notice.
C. Falls within JEDEC MS–001, except 18 and 20 pin minimum body length (Dim A).
D. The 20 pin end lead shoulder width is a vendor option, either half or full width.

D (R–PDSO–G16) PLASTIC SMALL–OUTLINE PACKAGE

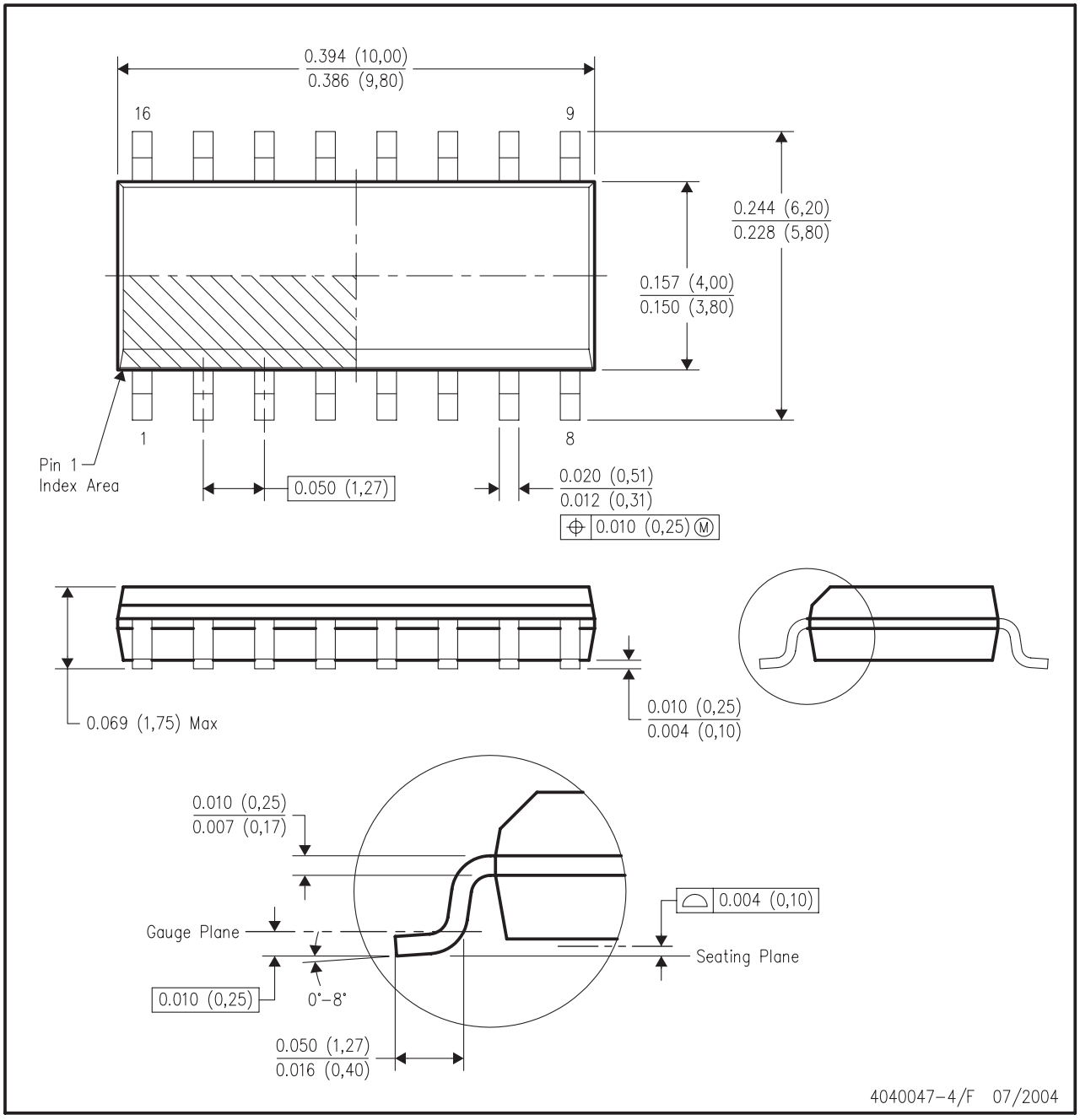

NOTES:
A. All linear dimensions are in inches (millimeters).
B. This drawing is subject to change without notice.
C. Body dimensions do not include mold flash or protrusion not to exceed 0.006 (0,15).
D. Falls within JEDEC MS–012 variation AC.

MECHANICAL DATA

NS (R-PDSO-G)** **PLASTIC SMALL-OUTLINE PACKAGE**

14-PINS SHOWN

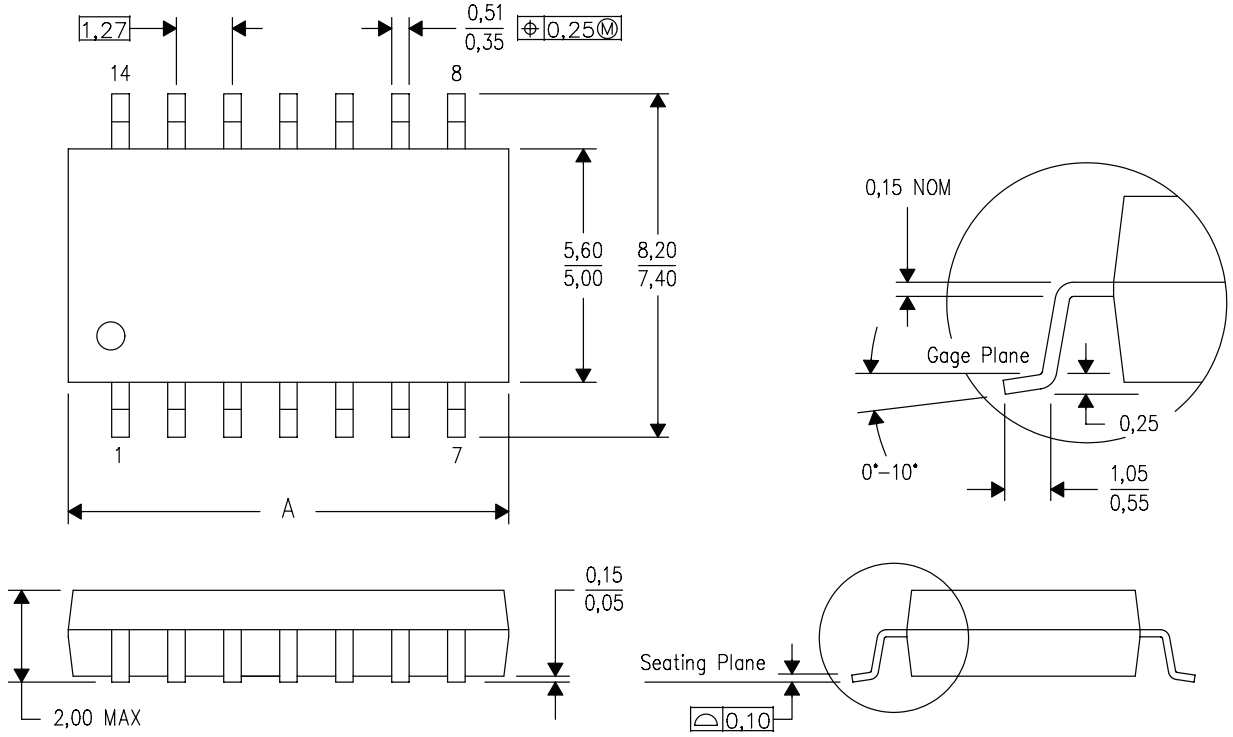

DIM \ PINS **	14	16	20	24
A MAX	10,50	10,50	12,90	15,30
A MIN	9,90	9,90	12,30	14,70

4040062/C 03/03

NOTES:
A. All linear dimensions are in millimeters.
B. This drawing is subject to change without notice.
C. Body dimensions do not include mold flash or protrusion, not to exceed 0,15.

IMPORTANT NOTICE

Texas Instruments Incorporated and its subsidiaries (TI) reserve the right to make corrections, modifications, enhancements, improvements, and other changes to its products and services at any time and to discontinue any product or service without notice. Customers should obtain the latest relevant information before placing orders and should verify that such information is current and complete. All products are sold subject to TI's terms and conditions of sale supplied at the time of order acknowledgment.

TI warrants performance of its hardware products to the specifications applicable at the time of sale in accordance with TI's standard warranty. Testing and other quality control techniques are used to the extent TI deems necessary to support this warranty. Except where mandated by government requirements, testing of all parameters of each product is not necessarily performed.

TI assumes no liability for applications assistance or customer product design. Customers are responsible for their products and applications using TI components. To minimize the risks associated with customer products and applications, customers should provide adequate design and operating safeguards.

TI does not warrant or represent that any license, either express or implied, is granted under any TI patent right, copyright, mask work right, or other TI intellectual property right relating to any combination, machine, or process in which TI products or services are used. Information published by TI regarding third-party products or services does not constitute a license from TI to use such products or services or a warranty or endorsement thereof. Use of such information may require a license from a third party under the patents or other intellectual property of the third party, or a license from TI under the patents or other intellectual property of TI.

Reproduction of information in TI data books or data sheets is permissible only if reproduction is without alteration and is accompanied by all associated warranties, conditions, limitations, and notices. Reproduction of this information with alteration is an unfair and deceptive business practice. TI is not responsible or liable for such altered documentation.

Resale of TI products or services with statements different from or beyond the parameters stated by TI for that product or service voids all express and any implied warranties for the associated TI product or service and is an unfair and deceptive business practice. TI is not responsible or liable for any such statements.

Following are URLs where you can obtain information on other Texas Instruments products and application solutions:

Products		**Applications**	
Amplifiers	amplifier.ti.com	Audio	www.ti.com/audio
Data Converters	dataconverter.ti.com	Automotive	www.ti.com/automotive
DSP	dsp.ti.com	Broadband	www.ti.com/broadband
Interface	interface.ti.com	Digital Control	www.ti.com/digitalcontrol
Logic	logic.ti.com	Military	www.ti.com/military
Power Mgmt	power.ti.com	Optical Networking	www.ti.com/opticalnetwork
Microcontrollers	microcontroller.ti.com	Security	www.ti.com/security
		Telephony	www.ti.com/telephony
		Video & Imaging	www.ti.com/video
		Wireless	www.ti.com/wireless

Mailing Address: Texas Instruments
Post Office Box 655303 Dallas, Texas 75265

Copyright © 2005, Texas Instruments Incorporated